Greenearth Energy Ltd.

New CO_2 Fuels: An Introduction...

11th April 2013

From challenge to opportunity

Greenearth Energy – Group Overview

Greenearth Energy Ltd.

Greenearth Energy Ltd.

Greenearth Energy Efficiency.

Cash Generator

Energy Efficient Lighting Solutions

Sector Focus:
Industrial-Warehouse-Manufacturing

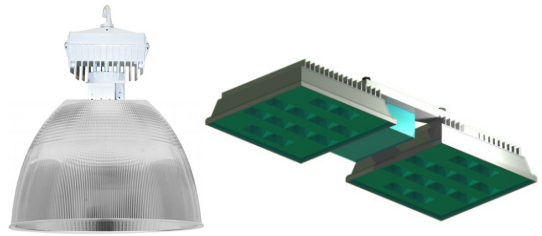

Key customer base established
Cash flow generating
Proven efficiencies over 60%
Pay-backs between <1 and 3 years

METROLIGHT
LIGHT FORWARD

NewCO2Fuels

CO_2 to Fuel

NCF
New CO2 Fuels

Joint Venture with NCF Israel and Erdi Fuels Ltd

ErdiGroup

מכון ויצמן למדע
WEIZMANN INSTITUTE OF SCIENCE

Geothermal

Established Government Grant

Three Geothermal permits in the Latrobe Valley & Geelong

$25m State Government ETIS Grant awarded for Geelong

Geelong Geothermal Power Project to establish a proof of resource and 12MW demonstration plant

Partners include:

LEIGHTON
THE UNIVERSITY OF MELBOURNE
ALCOA
Holcim
State Government Victoria

New CO2 Fuels

Greenearth Energy Ltd.

NewCO2Fuels

CO^2 to Fuel Conversion Technology

Relationship initiated in 2011

NCF New CO2 Fuels

Greenearth Energy Ltd. ↔ NCF Staff

Greenearth Energy holds 42.5% of the equity in NewCO2 Fuels Ltd.

Under development with Weizmann Institute in Israel.

Only Australian company in the past 30 years to establish a deal with the Institute.

מכון ויצמן למדע
WEIZMANN INSTITUTE OF SCIENCE

Why is Greenearth Energy excited by this?

✓ **Game changing technology:**
- Converting CO_2 to Fuel using solar energy

✓ **Proven Science with key efficiencies & stability:**
- Proven in the laboratory with electrical and gas energy
- Industrialise via modular plants, not larger scale

✓ **Proof of concept nearing completion, pilot phase approaching;**
- Technology Demonstrator to be completed 2013

✓ **Interest building amongst high CO_2 emitters in Australia:**
1. Establishing a viable new fuel source at <50% of the price
2. Carbon Price; Turning a cost centre into a profit centre.
3. A social conscious; environmentally aware customers

✓ **Discussions held with key CO_2 emitters:**
- Talked with 11: representing >30% of Aust CO_2-e emissions

✓ **Technical reviews initiated with key potential partners.**

✓ **Greenearth Energy retains a royalty stream on all future production of fuel and construction of plants / systems.**

A current example - The numbers are compelling

Greenearth Energy Ltd.

An example of an operating, brown coal power station in Australia

Assume in this example we only capture & process 5% of the CO_2 emitted at the plant

	Units of Measure	Units	Capture 5%
CO_2 Conversion Units	Number of units	150,000	7,500
Occupied land area	Hectares	22,000	1,100
Amount of CO_2 processed	Millions of tons p/year	15.7	0.785
Amount of H_2O processed	Millions of tons p/year	12.8	0.64
Amount of Oxygen produced	Millions of tons p/year	17	0.85
Amount of methanol produced	Millions of tons p/year	11	0.55
Revenues per year	Millions of $USD	$4,750	$238
Royalties from Sales for GER @1% per module	Millions of $USD	$47.5	$2.4
Daily royalties to Greenearth from Sales	$USD	$130,137	**$6,507**

NCF New CO2 Fuels

Long term potential scenarios for Greenearth Energy

Greenearth Energy Ltd.

Australian market

Penetration scenarios:	0.5% market share	1% market share	5% market share
Amount of CO_2 processed	1,250,000 tons/year	2,500,000 tons/year	12,500,000 tons/year
Amount of methanol produced	321,888 tons/year	643,777 tons/year	3,218,884 tons/year
Revenues per year	$140m	$280m	$1,400m
Royalties from Sales per year to GER	$1.4m	$2.80m	$14m
Daily royalties from Sales to GER	**$3,836**	**$7,671**	**$38,356**

Global market

Penetration scenarios:	0.25% market share	1% market share	5% market share
Amount of CO_2 processed	97,500,000 tons/year	390,000,000 tons/year	1,950,000,000 tons/year
Amount of methanol produced	25 Million tons/year	100 Million tons/year	500 Million tons/year
Revenues per year	$ 10,900 M	$ 43,500 M	$ 217,600 M
Royalties from Sales per year to GER	$ 109 M	$ 435 M	$ 2,176 M
Daily royalties from Sales to GER	**$298,630**	**$1,191,781**	**$5,961,644**

NCF New CO2 Fuels

Producing Liquid Fuels Out of CO_2 By Use of Solar Energy

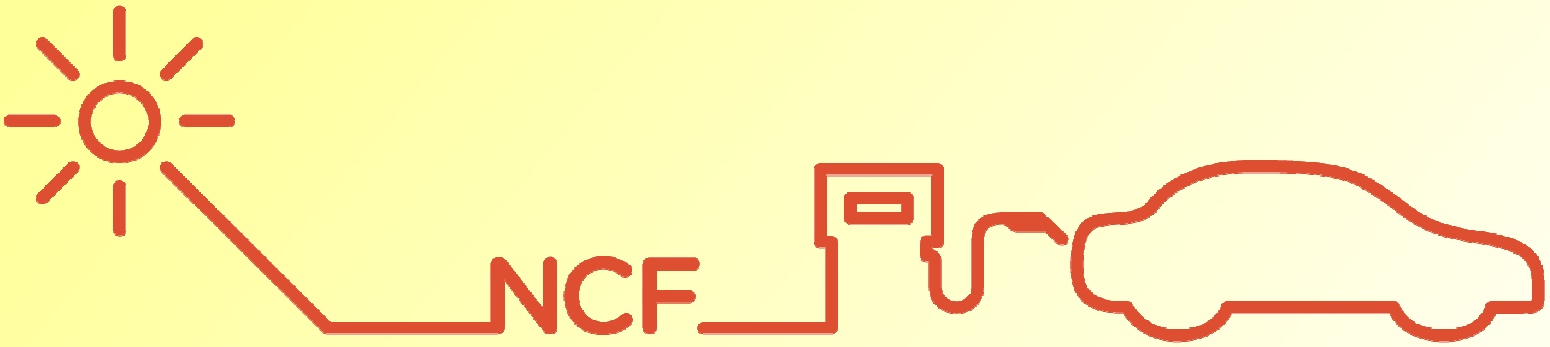

NCF
New CO_2 Fuels

Who are we and where we are

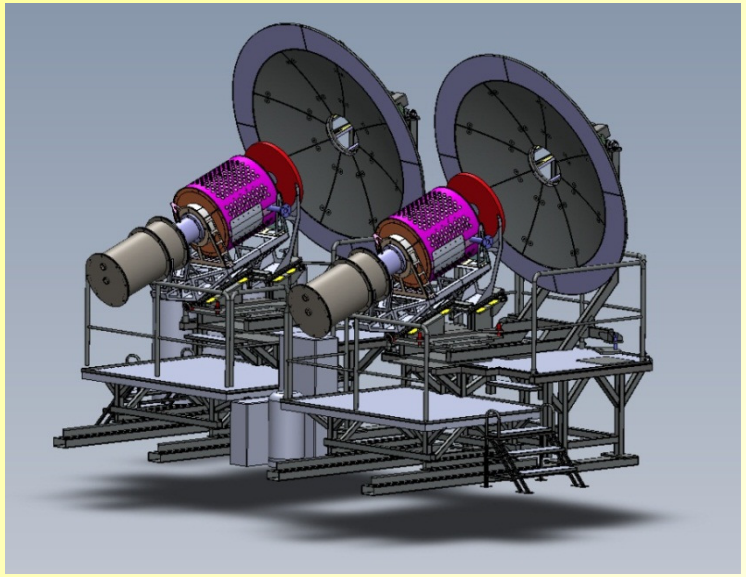

- Incepted in 2011
- Exclusive licensed CO_2 dissociation technology and IP from the Weizmann Institute of Science
- A Greenearth Energy (Australia) affiliated company, funded by Erdi Group

ErdiGroup

Greenearth Energy Ltd.

NCF New CO_2 Fuels

What Makes NCF Unique

- Combination of
  - Methanol / Electricity Production
  - CO_2 as feedstock
  - Solar energy driven
  - Very high efficiency (~40%)
  - Cost effective
- Flexible solutions
- Integrated / self sufficient solution
- Growing through duplication – no scale up
- Dissociation process improvement in parallel to system demonstration
- Competitiveness not based on incentives
- Highly qualified and diversified team

NCF
New CO_2 Fuels

Market Overview

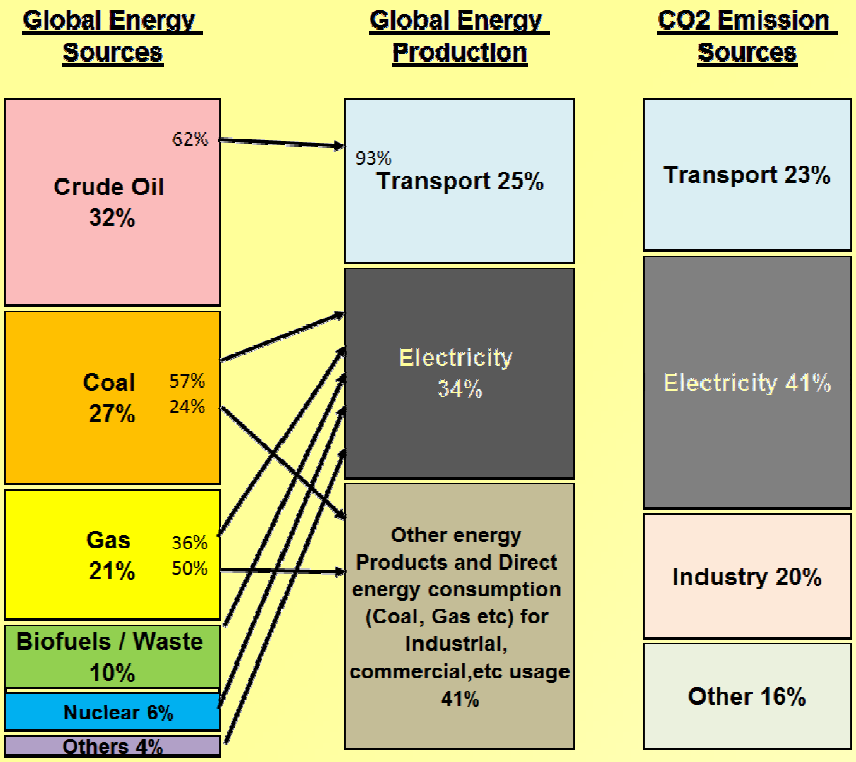

Source: www.iea.org (2011)

CO2 Emission Problem

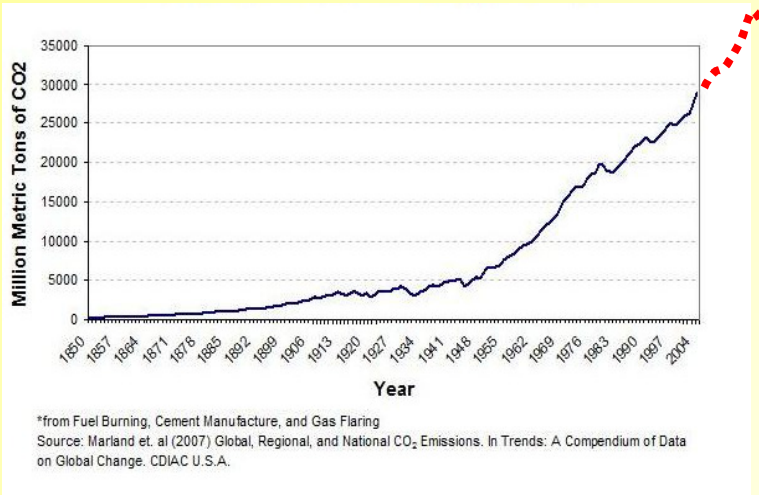

*from Fuel Burning, Cement Manufacture, and Gas Flaring
Source: Marland et. al (2007) Global, Regional, and National CO_2 Emissions. In Trends: A Compendium of Data on Global Change. CDIAC U.S.A.

Natural Reserves left:

Oil
43 years

Natural gas
167 years

Coal
417 years

NCF
New CO_2 Fuels

Our Solution
CO_2 to Liquid Fuel

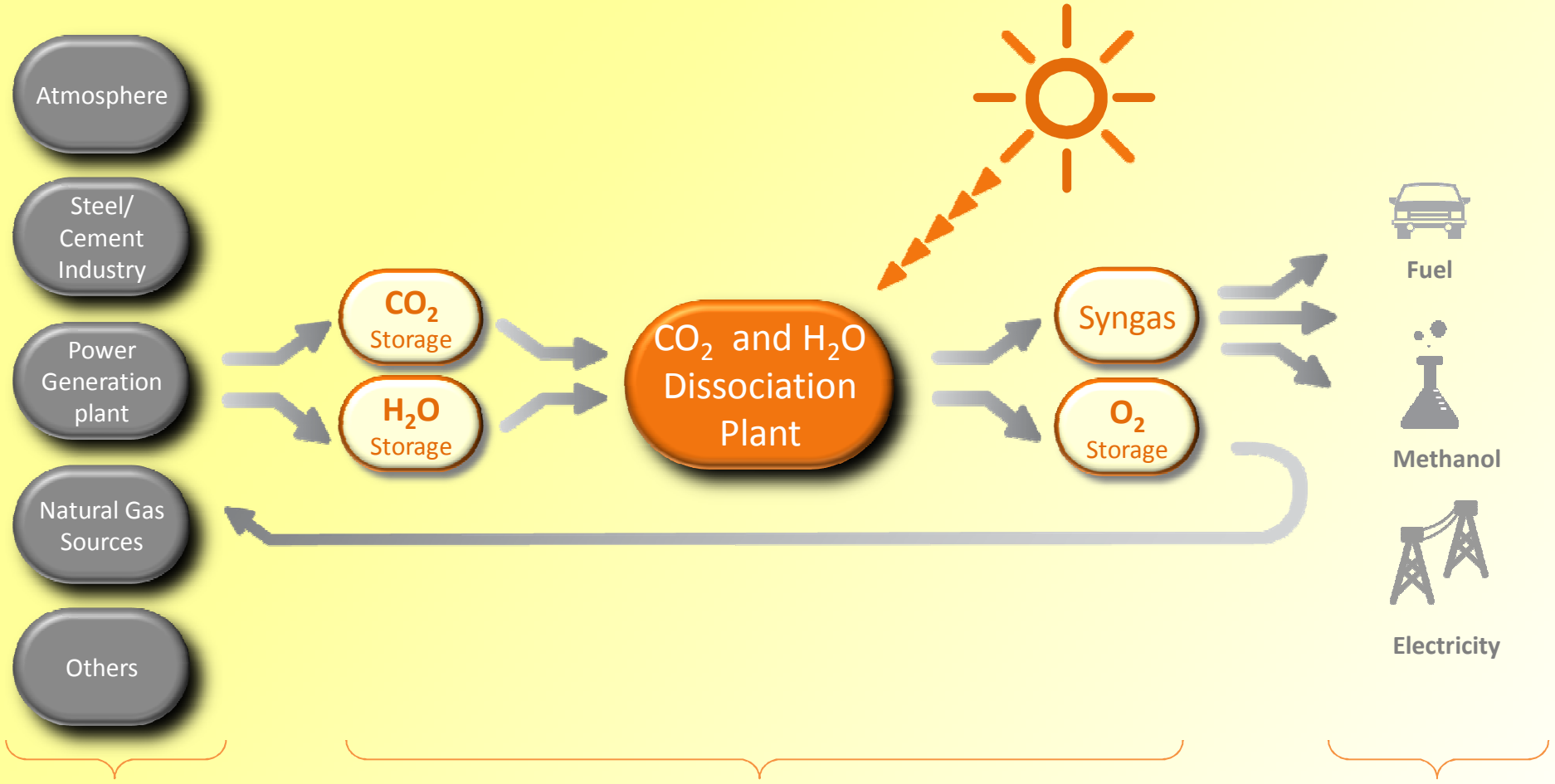

NCF
New CO_2 Fuels

Technology Developed at the Weizmann Institute of Science

CO_2 dissociation into CO and O_2

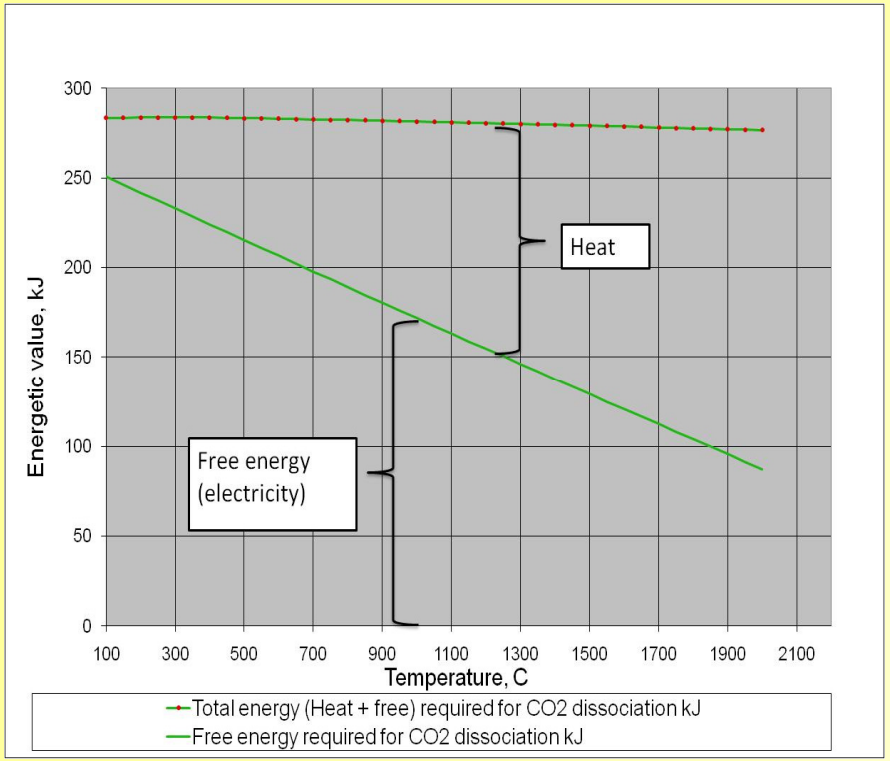

The CO_2 dissociation uses a combination of heat and energy

High temperatures decrease the electricity required to dissociate the CO_2.

At ~2300°C the dissociation happens spontaneously

NCF
New CO2 Fuels

The System

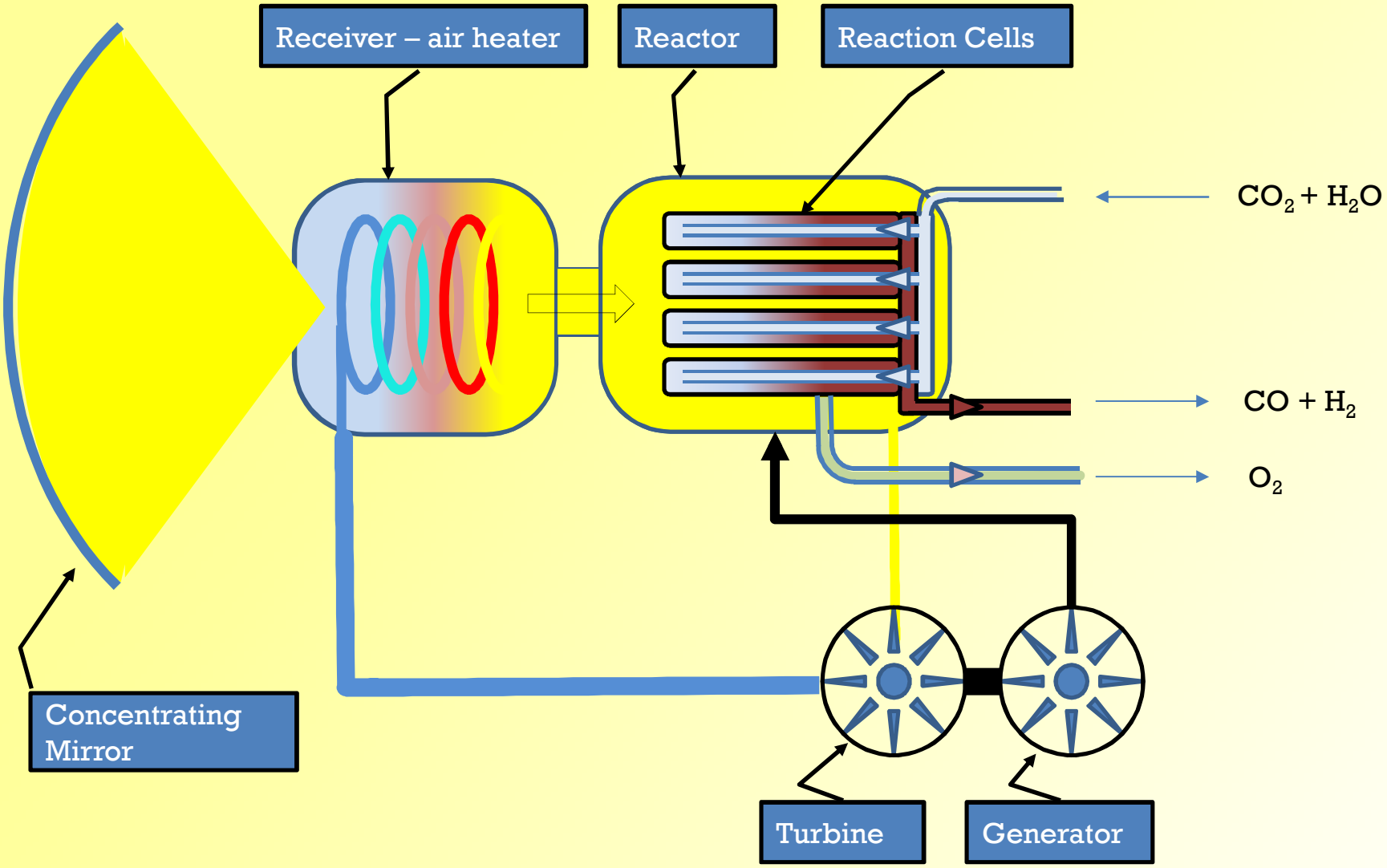

NCF
New CO2 Fuels

The Technology

- Concentrate solar energy to heat air reaching >1000°C
- Proprietary high temperature process
- Advanced structural design and selection of materials
- Use the excess heat to generate electricity
- Self contained apparatus

NCF
New CO_2 Fuels

The Product

The receiver/Reactor

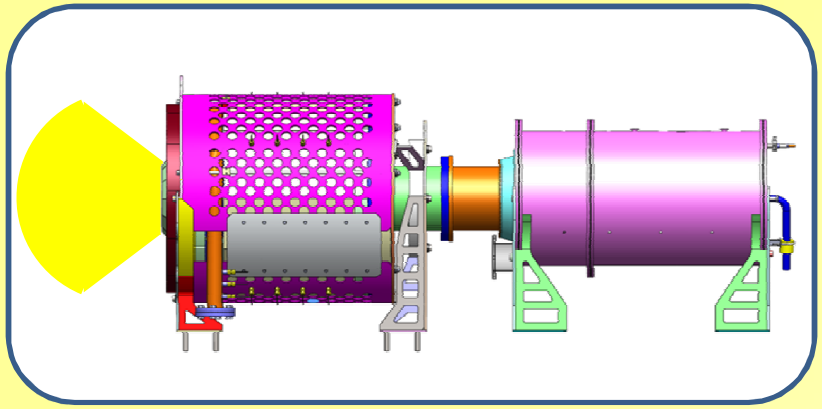

The Conversion Unit

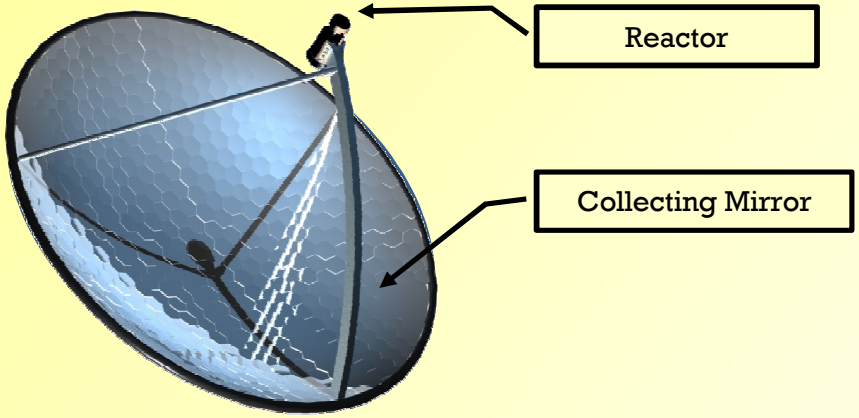

The Tracking Conversion Array

Multiple Conversion Units mounted on a solar tracker comprise the tracking CO_2 conversion unit

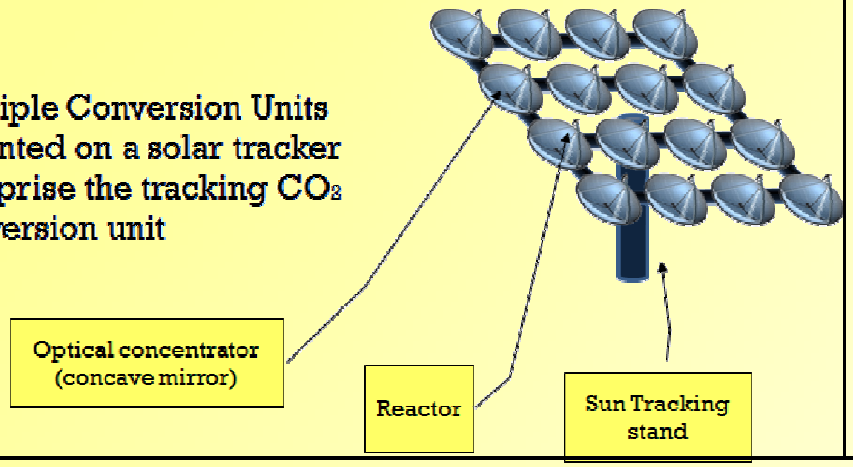

CO_2 Dissociation Plant

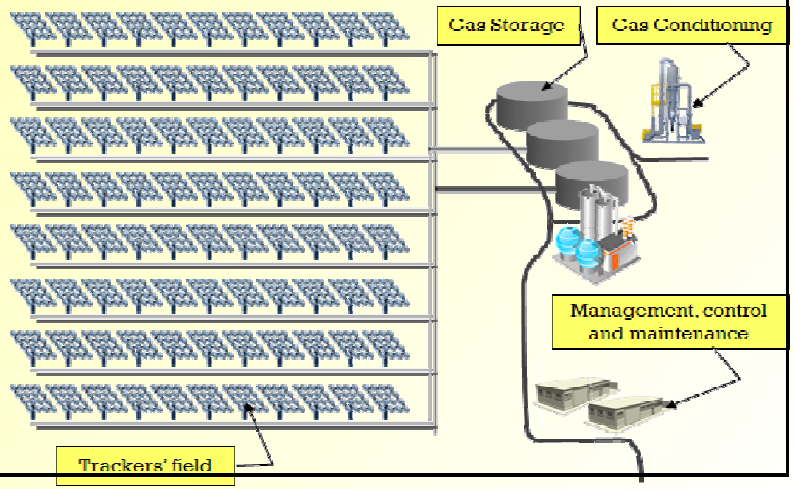

Nominal Quantities and Values For a Plant

Parameter	Units	Value
Number of 500m^2 dishes	Units	1,075
Land use	Km^2	1.6
Annual CO_2 consumption	Tons	115,600
Annual H_2O consumption	Tons	94,700
Annual methanol production	Tons	80,000
Project methanol product cost	$/litter in equivalent energy content to petrol	0.5
Number of cars running on the produced fuel (average annual consumption)	#	50,000
Annual O_2 production	Tons	126,000

- Plant size is flexible and the above table is an example.

NCF
New CO2 Fuels

The Proof of Concept Device

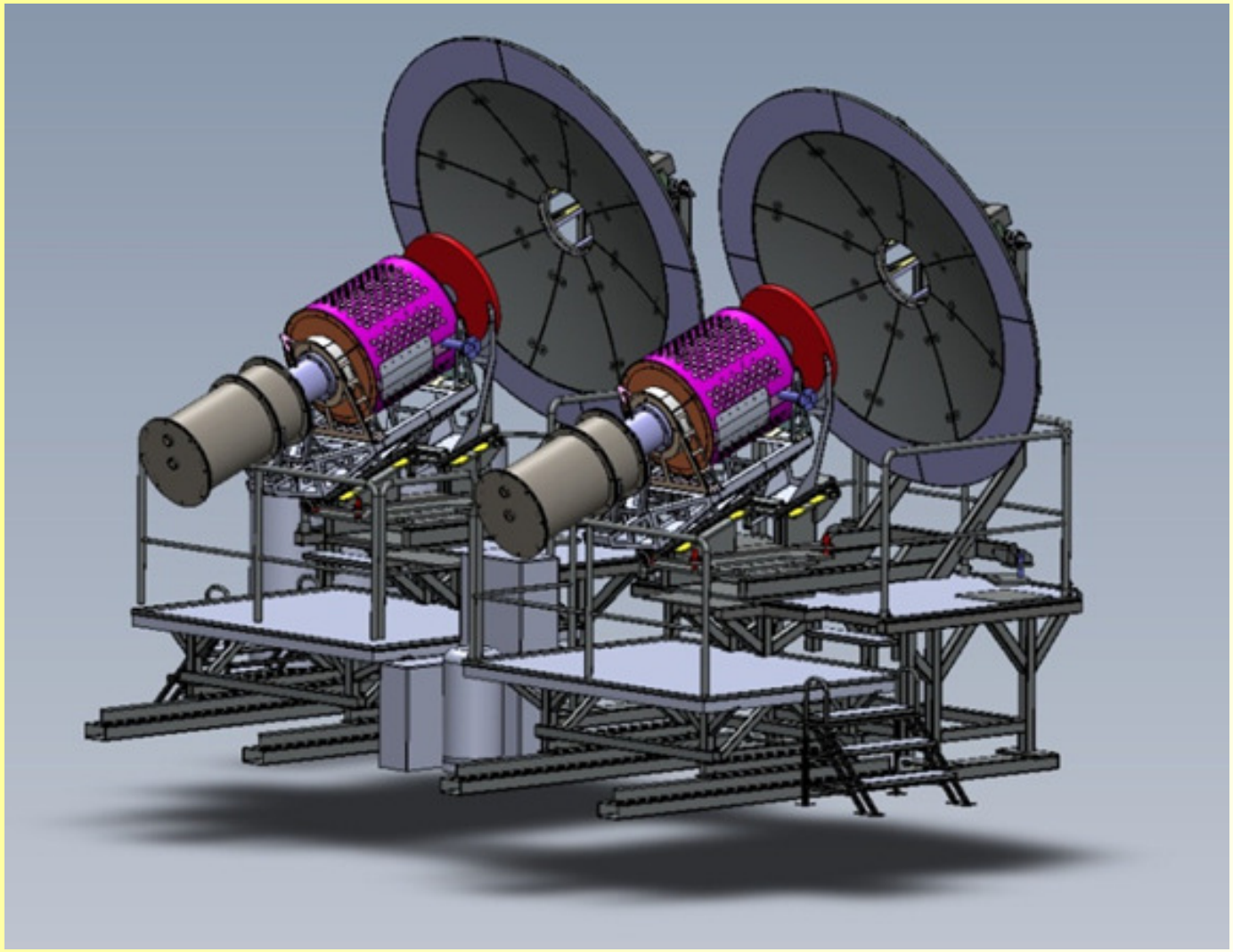

NCF
New CO_2 Fuels

The Solar Testing Facility

NCF
New CO_2 Fuels

The Tracking Mirrors' Field

NCF
New CO_2 Fuels

Tracking Alignment

NCF
New CO_2 Fuels

Testing Fixtures

NCF
New CO_2 Fuels

Focusing Mirror Holding Structure

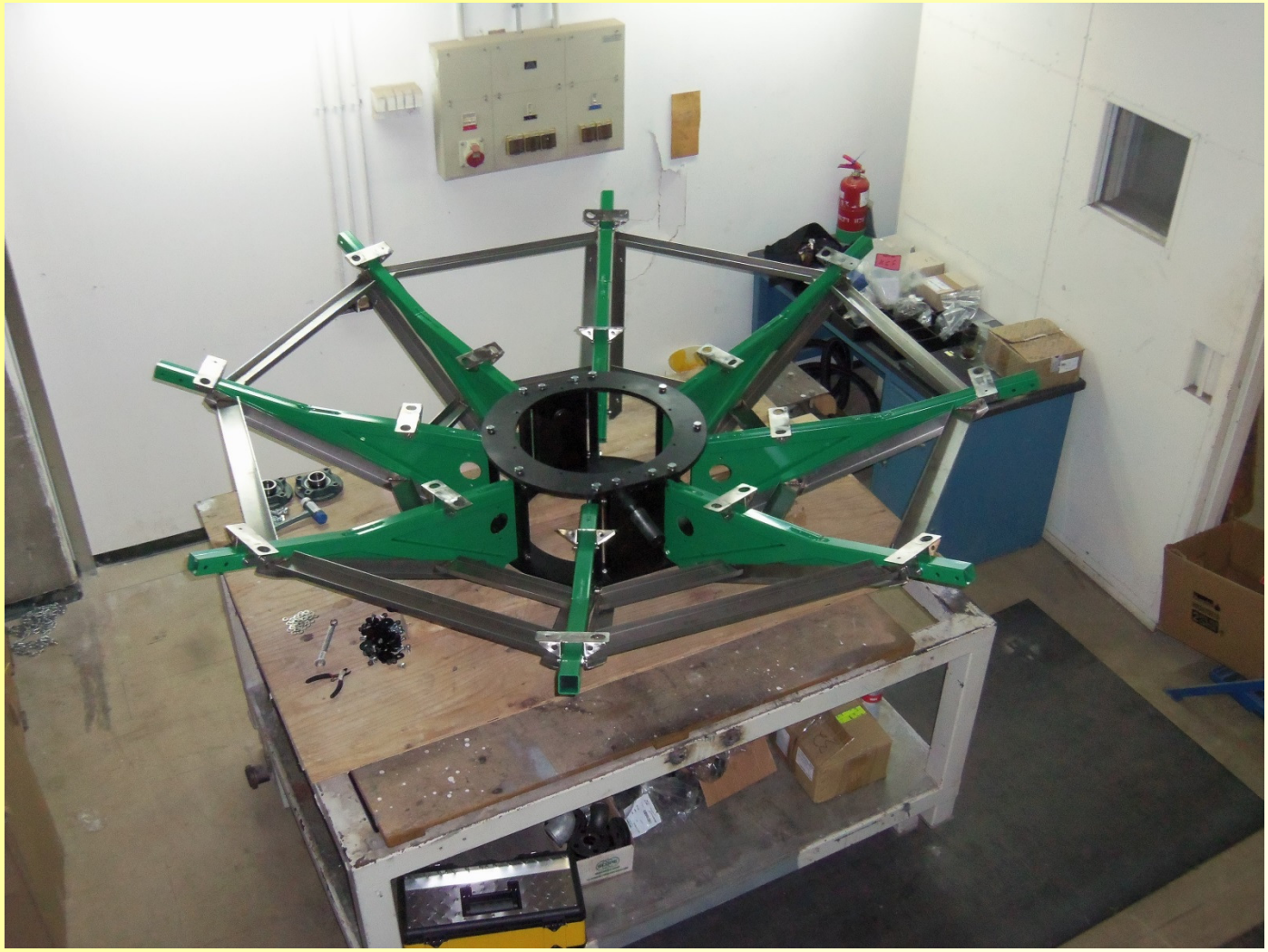

Mounting the Mirrors

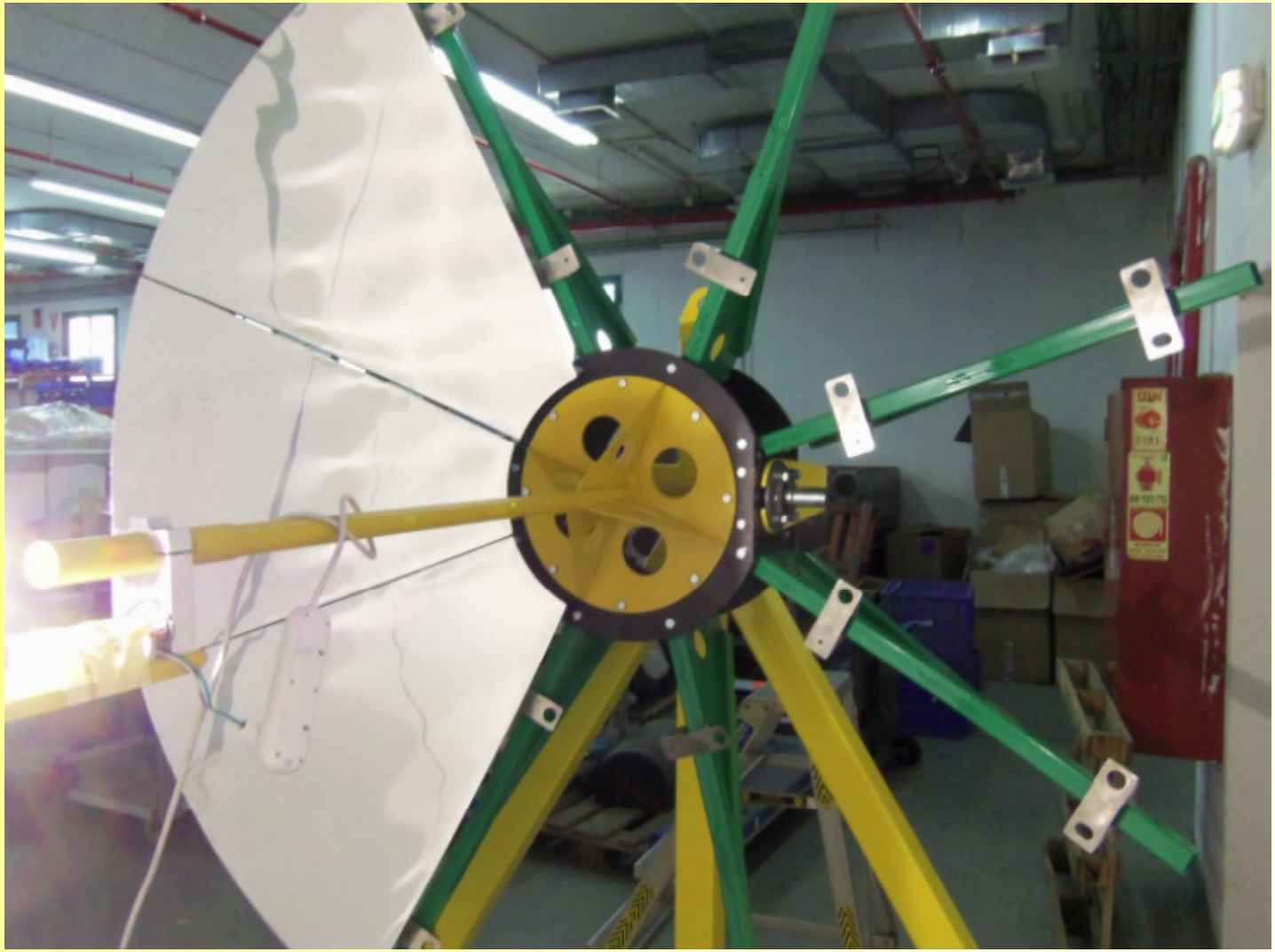

Mirror Structure Assembly

NCF
New CO_2 Fuels

The Control Room

NCF
New CO_2 Fuels

The Team

Mr. David Banitt – 30 years' experience in product development, marketing and senior management in the High-Tech industry, including multidisciplinary systems, electro-optics and energy products. Holds a B.Sc. in electrical engineering from the Tel-Aviv University, Israel.

Dr. David Scheiner has over 15 years of experience in product development and management in the high-tech industry. He was previously CTO and VP R&D at BrightView Systems and CTO at Nova Measuring Instruments. He holds a B.Sc. and M.Sc. in electrical engineering from the Technion – Israel Institute of Technology and a Ph.D. in physics from the Weizmann Institute of Science.

Mr. Uzi Aharony has more than 25 years of experience in a variety of industries in product development, operation and manufacturing. Holds a B.Sc. in mechanical engineering from the Technion-Israel Institute of Technology and M.Sc. in manufacturing systems engineering gained at Stanford University, California, U.S.A.

Dr. Yury Alioshin – holds a M.Sc. in mechanical engineering and has more than 18 years in research and development in various multidisciplinary systems. Holds a Ph.D. in the field of Solar energy at the Weizmann Institute.

Dr. Gidon Ferdiman Holds B.Sc. in Mechanical engineering and M.Sc. in Aeronautical engineering, from the Technion, Israel, and has 10 years of practical development and engineering experience in the Israeli defense Industry. Holds a Ph.D. in the field of Solar energy at the Weizmann Institute..

Senior Advisor

Professor Jacob Karni – Holds a B.Sc. in civil engineering, M.Sc. and Ph.D in mechanical engineering, gained at the University of Minnesota. Over 20 years of research and development of concentration, absorption, conversion transmission and storage of concentrated solar energy.

NCF
New CO_2 Fuels

New CO2 Fuels – Summary

- Game changing technology converting CO_2 to Fuel via solar energy;
- The science is laboratory proven;
- Technology Demonstrator to be completed 2013;
- GER maintains a royalty stream on all fuel produced & every plant commissioned;

➢ The numbers are compelling.

Australian & International Press past 12 months

Greenearth Energy Ltd.

The Australian – May 12, 2012

http://www.theaustralian.com.au/business/economics/clean-energy-project-using-carbon-dioxide-a-breath-of-fresh-air/story-e6frg926-1226353368018

Jerusalem Post – June 6, 2012

http://www.jpost.com/Sci-Tech/Article.aspx?id=273151

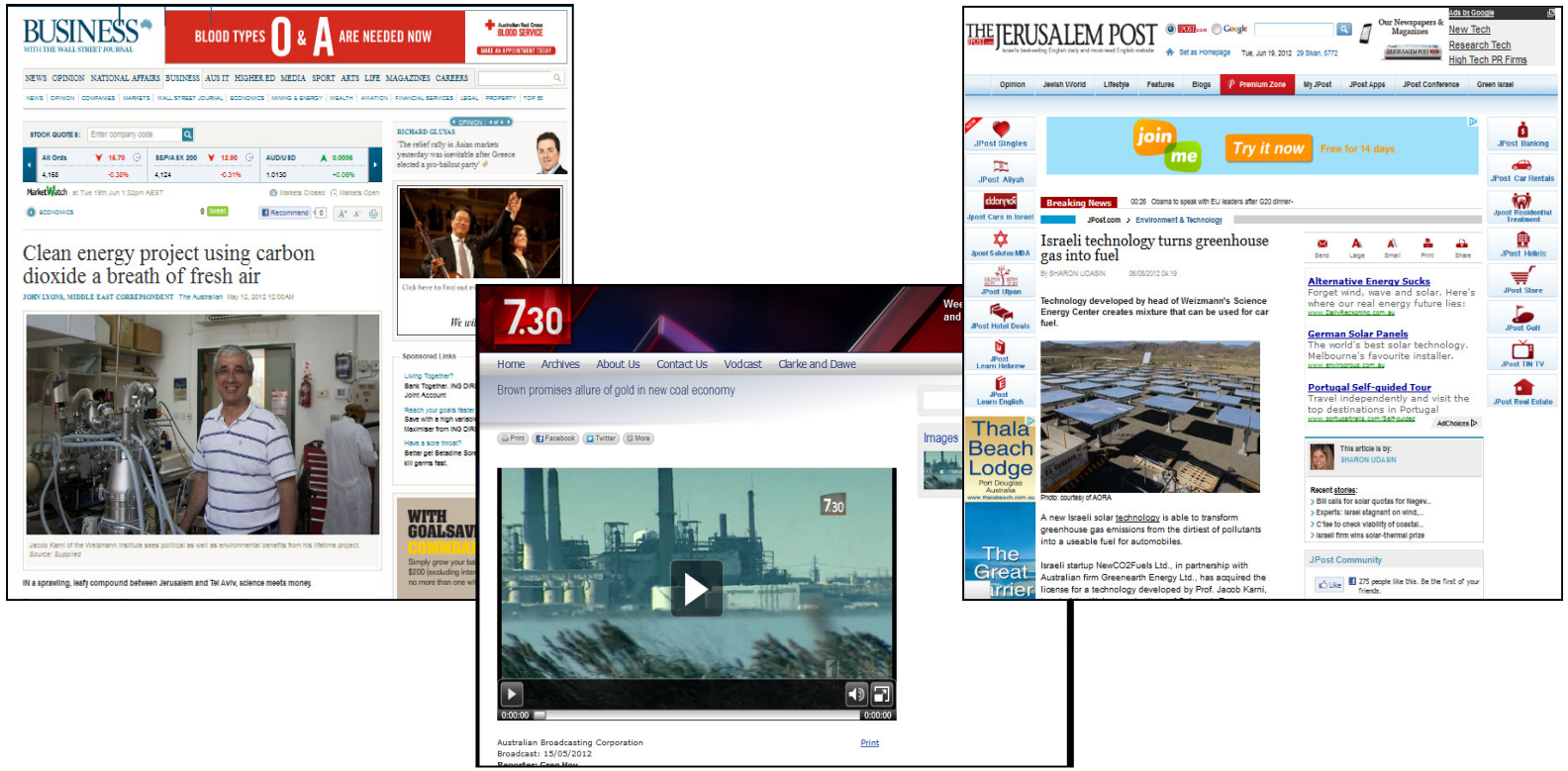

7:30 Report (ABC TV) – May 15, 2012

http://www.abc.net.au/7.30/content/2012/s3503600.htm

NCF New CO2 Fuels

Contact Us

Samuel Marks
Managing Director
Samuel.Marks@greenearthenergy.com.au
Tel: +61 3 8625 0500

David Banitt
CEO - NewCO_2Fuels Ltd
dbanitt@newco2fuels.co.il
Tel +972 8 910 6660