ASX Technical and Operational Forum

ASX

Introduction

Cardiff Smith, General Manager,
Customer & Technical Operations

ASX

Agenda

Introduction	Cardiff Smith, General Manager, Customer & Technical Operations
Opening remarks	Diona Rae – Chief Operating Officer
Markets - Integrated Trading Platform	***SR15 and SR4 –*** Andrew Walton, General Manager Trading & Tracy Nicol, Program Director. ***Infrastructure update*** - Nick Rakebrandt, Head of Enterprise & Customer Networks ***Recovery Guide*** - Ben Jackson, General Manager Market Operations
ClearStar – update	Sascha Chandler, Program Director, Markets Katie McDermott, General Manager, Derivatives Clearing Services
CHESS Replacement update	Andrew Jones, General Manager Securities and Payments
Q&A	Cardiff Smith, General Manager, Customer & Technical Operations

ASX

Opening Remarks

Diona Rae – Chief Operating Officer

Acknowledging Country

ASX acknowledges the Traditional Owners of Country throughout Australia. We pay our respects to Elders past and present.

Artwork by Lee Ann Hall, *My country My People*

Markets – Integrated Trading Platform

SR15 and SR4 – Andrew Walton, General Manager Trading & Tracy Nicol, Program Director.

Infrastructure Update- Nick Rakebrandt, Head of Enterprise & Customer Networks

Markets Recovery – Ben Jackson, General Manager Market Operations

ASX Integrated Plan for Trading

Andrew Walton

ASX

Agenda

01 Integrated Plan for Trading

02 ASX Trade SR15

03 ASX 24 SR4

04 ASX 24 Platform Replacement

ASX

ASX Integrated Plan for Trading

ASX Trade, ASX 24 and Network Replacement

ASX Trade
Service Releases

- Incremental product enhancements for customers commencing with SR15
- Retire aged proprietary communication protocols and adopt international industry standards

ASX 24
Minor service release and platform replacement

- Interim upgrade on the current platform to deliver a product enhancement for customers
- Replace the current platform with a new vendor solution

Networks
Replacement of ASX Trade and ASX 24 infrastructure

- Replacement of network infrastructure for the ASX Trade and ASX 24 platforms, including back-end, colocation, and WAN
- The WAN network will be replaced in-situ, while the backend & colo networks will be built in parallel to host new ASX Trade & ASX 24 platforms

ASX Trade
Service Release 15

Andrew Walton

ASX

ASX Service Release 15

Mandatory functional components

1. Remove opening auction stagger

> Cash Market products will move to a randomised single opening time and an Opening Single Price Auction (OSPA) levelling period introduced

2. Post close trading session

> Introduction of a Post Close trading session immediately following the closing auction (CSPA) providing an opportunity to execute at the CSPA price

3. CSPA enhancements for company announcements

> Instruments that miss the CSPA due to a price sensitive announcement will still have an auction where the PreNR period ends during the Post Close trading session

4. Simplification of block and late trades

> Block Special Crossing codes S1,S2 and S3 to be replaced by SC. Minimum tier value validated by the system. Consolidation of Late Trade codes from seven down to two (LT, L5)

5. Trading halt session state enhancements

> Trading Halt assigned a higher priority than ADJUST phase to ensure it is retained as the 'active' session state

ASX

ASX Service Release 15

Optional functional components

1 FIX Drop Copy

> FIX Drop Copy will provide users with the ability to receive a copy of both orders and/or trades. The FIX Drop Copy feed also includes market and instrument reference data

2 FIX Order Entry *

> FIX Order Entry will provide users with the ability to both submit and manage orders and trades. Market data and security reference data will also be available

3 Market Data Feed *

> A Binary Market Data Feed contains additional messages and fields not available in 'standard ITCH" feeds. This service will provide users with the ability to receive reference data, event & state changes, price information, and recovery services

** ASX recognises with the introduction of new interfaces and protocols, Participants may need to run parallel protocols during their transition to reduce risk. During the transitional period, ASX's pricing strategy will be designed to be cost-neutral, ensuring customers can seamlessly migrate to the new services without any incremental cost.*

ASX

Timeline

CDE+ Drops, Documentation, IWT and Go-Live

April 2024	June 2024	August 2024	October 2024	December 2024	April-May 2025	May 2025
CDE+ Drop 1	**CDE+ Drop 2**	**CDE+ Drop 3**	**Tech Docs**	**CDE+ Drop 4**	**IWT**	**Go Live**
Removal of the staggered opening auction Minor defect fixes	Post Close Trading session Trading Halt Enhancements	Auction timer granularity Block and late trade reporting simplification	FIX Drop Copy	FIX Drop Copy	IWT 1 – 12 Apr IWT 2 / BCP – 3 May IWT 3 – 10 May	Go Live - 12 May

FIX Order Entry and MDF

- Documentation – Q1 2025
- CDE+ – Q2 2025
- Go live – Q3 2025

ASX

BCP and IWT

Business Continuity Testing with SR15 changes

- Replicate the same approach for SR14/REP 708 release to allow for more efficient use of resources
- The scope of this BCP will be different to the BCP test in October 2024 where we performed a catastrophic event with no return to trading that day
- We will look to run a smaller scope BCP event on an environment containing the SR15 changes, including failing over FIX Drop Copy
- This BCP will be smaller in scope where we fail processes and services at the application and network layers
- ASX will provide a market notice in due course with a runbook of IWT and BCP events for the day

Next Steps & Further Information

1. Continue carrying out testing of all mandatory functional enhancements in CDE+
   - Contact ASX Customer Technical Support team for any CDE+ assistance or questions (cts@asx.com.au or 1800 663 053)

2. Participants taking FIX Drop Copy:
   - FIX Drop Copy specification available on the Equity Market Working Group webpage
   - Firewall changes - IP and port changes are available in the ASX Trade Connectivity Guide
   - Post CDE+ Drop 4, reach out to your Business Development Manager to request FIX test sessions
   - To use FIX Drop Copy on go-live - participants must complete development and pass ASX conformance testing prior to the start of the IWT period

3. Participant IWT registration forms and run sheets will be available before end of March 2025

4. Next Equity Market Working Group to be scheduled in early 2025

5. Your Technical Account Manager will contact you to discuss your readiness for all key milestone dates

6. All relevant project information is available here

ASX

Equity Market Working Group – Next Steps

- ASX Equity Markets Working Group web page can be found Here

https://www.asx.com.au/markets/trade-our-cash-market/equity-market-working-group

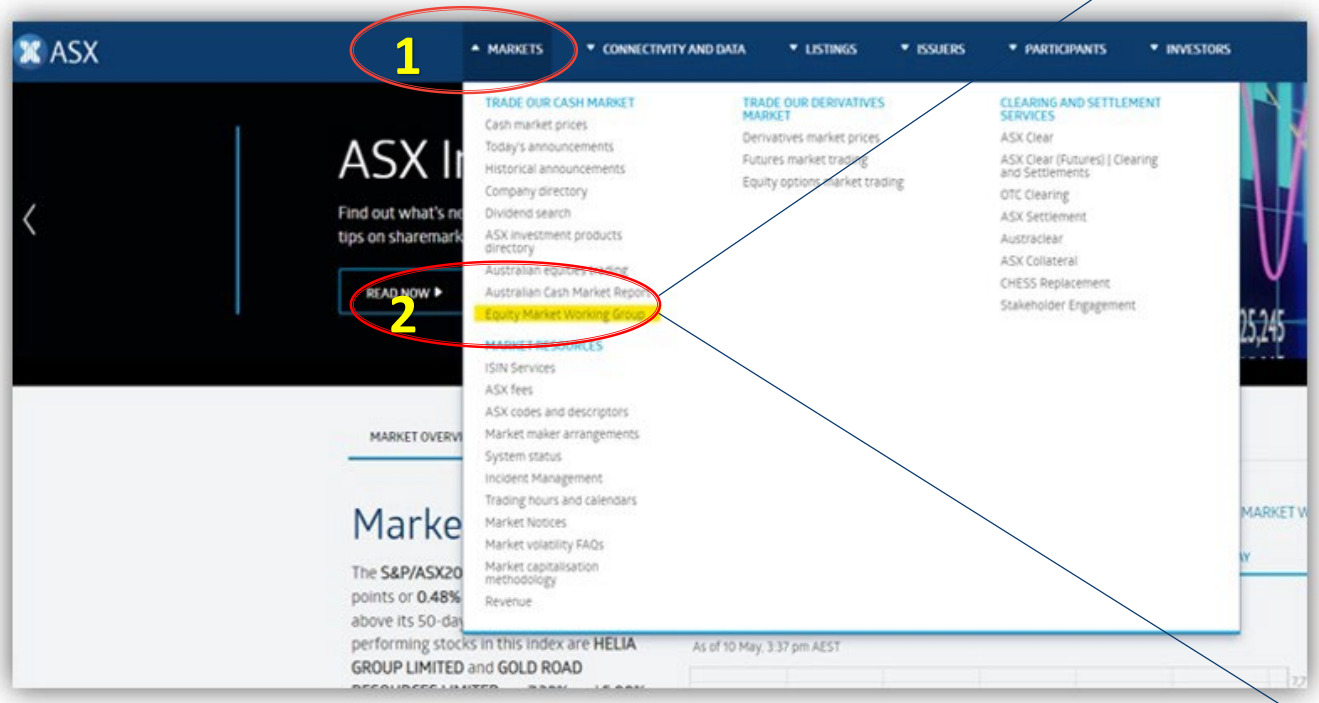

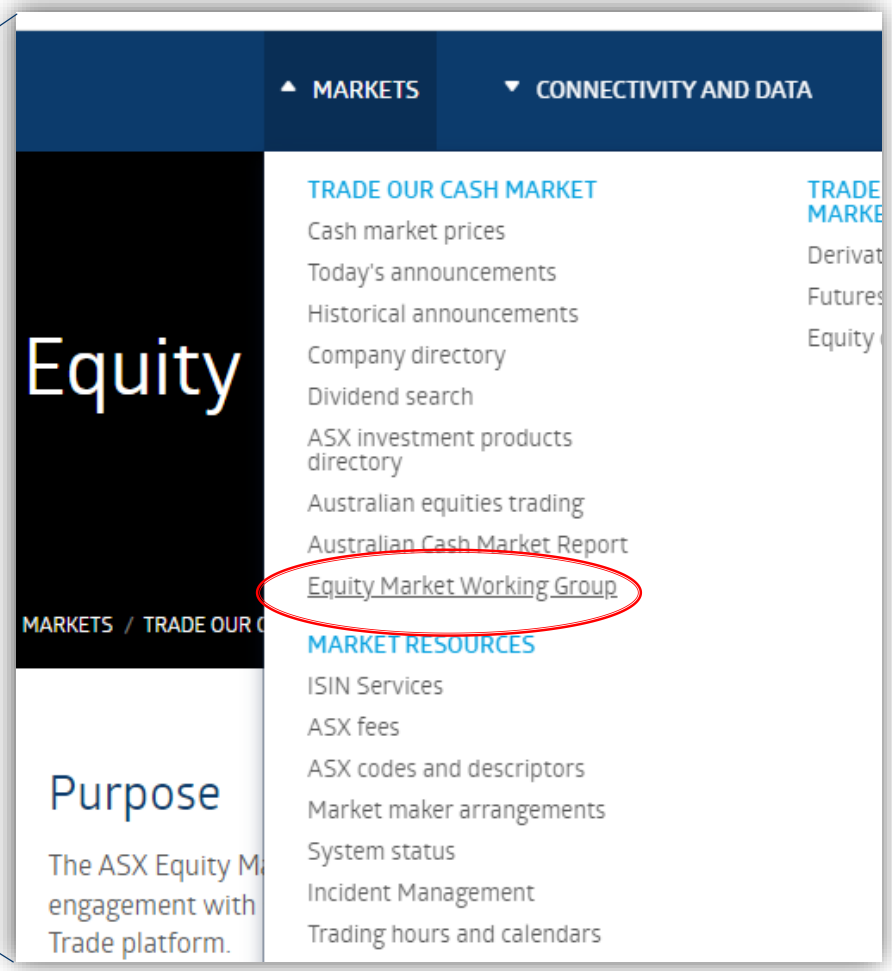

Next Steps

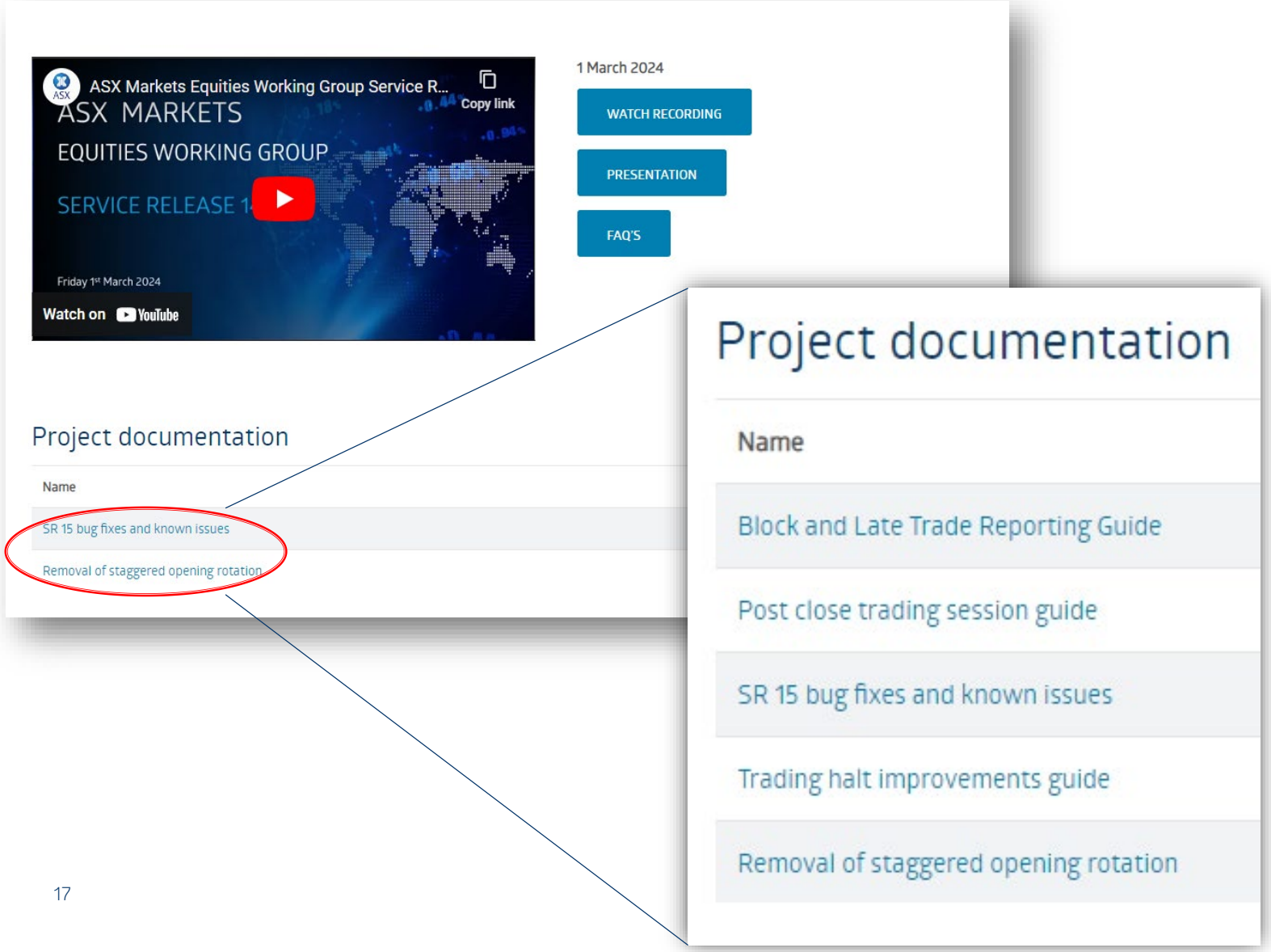

- All Equity Market Working Group recordings will be available to review
- Presentations will be available to download
- FAQ page on all aspects on SR15 is available and will be regularly updated
- All project documentation will be made available

ASX

ASX 24 Platform Replacement & SR4

Tracy Nicol

ASX

ASX 24 Bond Futures Delinking

ASX will introduce a change to the market microstructure for the 3, 5, 10 and 20 Year Bond Futures contracts during the roll period.

The purpose of the change is to improve liquidity and execution efficiency in the outright contracts during the roll week. This change is in response to extensive consultation with stakeholders.

These changes will commence with the March 2025 expiry:

1. Delink the Bond Futures contracts outright market from the calendar spread market during the week of the roll
2. Continue to narrow the ticks for the calendar spreads during the expiry week, while keeping the tick sizes at the wider increments in the outright contracts

CDE+ is now available for Participants and Vendors to test the changes

ASX 24 SR4 Timeline

20th November 2024

Market Notice

- Market notice advising on the proposed changes to the Bond Futures contract
- Testing schedule
- Target go-live
- Fact sheet on the proposed changes

26th November 2024

Bond Futures Delinking – roll week simulated

Available on CDE+ for Participant and vendor testing from 26 November 2024

20th January 2025

Bond Futures Delinking – transition into and out of roll week simulated

Supported on CDE+ from 20 January 2025 to 21 February 2025

8th March 2025

March 2025 Bond Roll

Go-live of changes to the bond futures contracts – delinking and retention of wider ticks on outright contracts

17th March 2025

March 2025 Bond Expiry

From 5.10pm Bond Futures and calendar spreads will be relinked and wider ticks applied to calendar spreads

ASX

SR4 Next Steps & Further Information

1. Participants and vendors are encouraged to conduct testing of the functional enhancements in CDE+
   - Contact ASX Customer Technical Support team for any CDE+ assistance or questions (cts@asx.com.au or 1800 663 053)
2. Your Technical Account Manager will contact you to discuss your readiness
3. Refer to ASX 24 Market Notice ASX Bond Futures Delinking and Tick Change Testing for information on testing dates and a factsheet for information on the functional change

ASX

ASX 24 Trading Platform - High Level Plan

Key indicative milestones for ASX 24*

1H 2025
- Business Design workshops

2H 2025
- Stakeholder feedback on scope and timeline

2026
- Customer testing

2027
- Target implementation

* The vendor selection process is in progress and therefore the timeline is still under development

ASX

Networks

Nick Rakebrandt

ASX

Agenda

01 Background

02 Trading WAN

03 ASX Net Global

04 Colocation

ASX

Trading Access Technical Products

Current Access Products

Established connectivity models may appear the same at a high level, however certain differences and combinations of various legacy changes have left the networks and services more complicated than desired

ASX Net Trading WAN was last upgraded in 2013, with the deployment of the Arista 7010T over the newly delivered ASX Net dark fibre network

Colocation Trading Networks were last upgraded in 2016 with the replacement of the LCC and RTC access switches in ALC

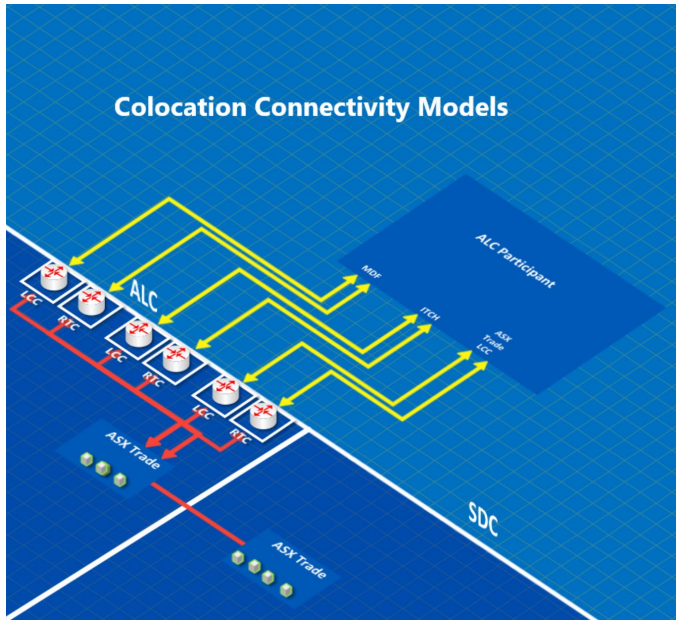

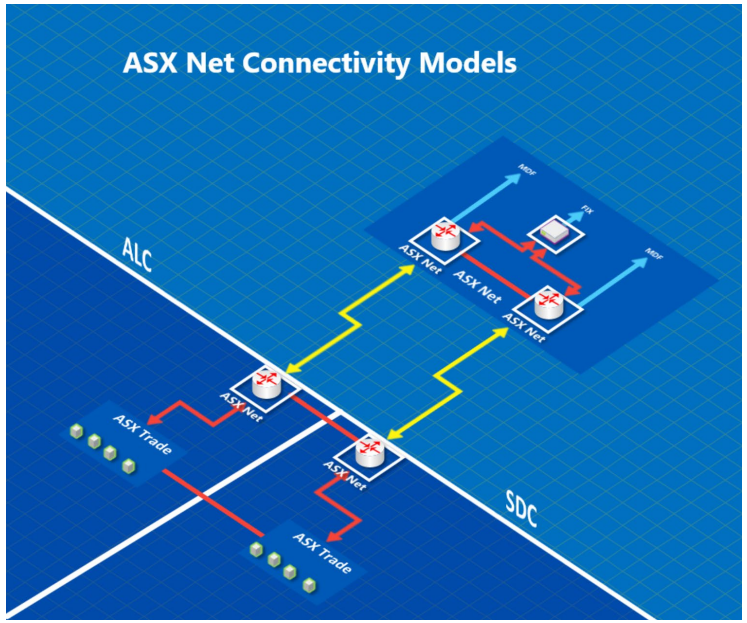

Design Principles

Objectives	Impact	Secure	Resilience	Lifecycle
	Limit Customer Impact Limit the impact of changes, where safely possible, on customers and their business	**Uplift Secure Transmission** Utilise network transmission to secure packets in flight over carrier links	**Improve Service Resiliency** Use knowledge of existing systems to reduce the probability of known limitations causing impacting events	**Plan For Future Changes** Simplify lifecycle management through network design

Delivery Phase

Trading Wide Area Network (WAN)

- **Refresh Trading WAN**
- **Improve Security**
- **Retire Server Gateways**

ASX

Trading Wide Area Network (WAN)

Market Data Access

Multicast Market Data products are delivered differently per market, over ASX Net

Resiliency

Uplift ASX Trade ITCH and OUCH over ASX Net by providing resilient network access products

Order Entry Access

Improve OUCH access by providing a resilient network product, in line with future FIX access.

Security

Opportunity to uplift security over backhaul network

ASX

Trading Wide Area Network (WAN)

Existing ASX Net Footprint

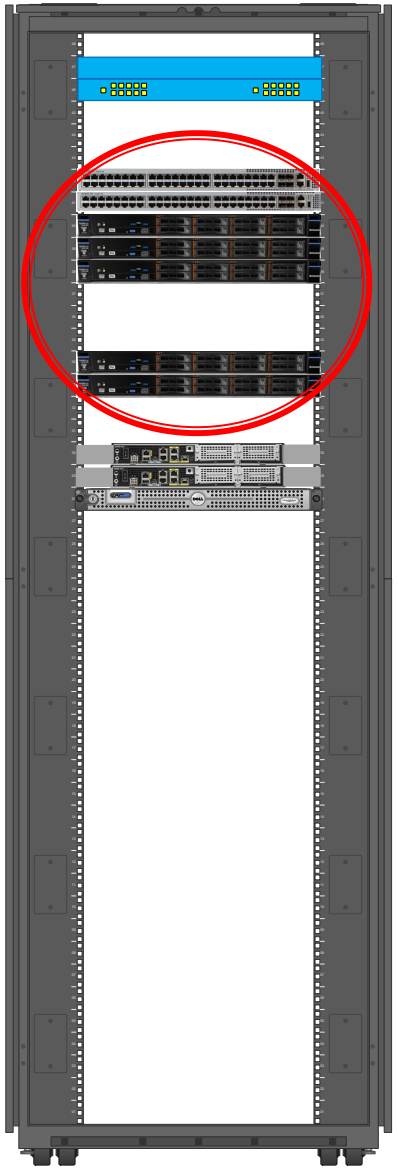

Transmission Equipment

Trading Services

Clearing, Settlement and Tech Services

Trading Wide Area Network (WAN)

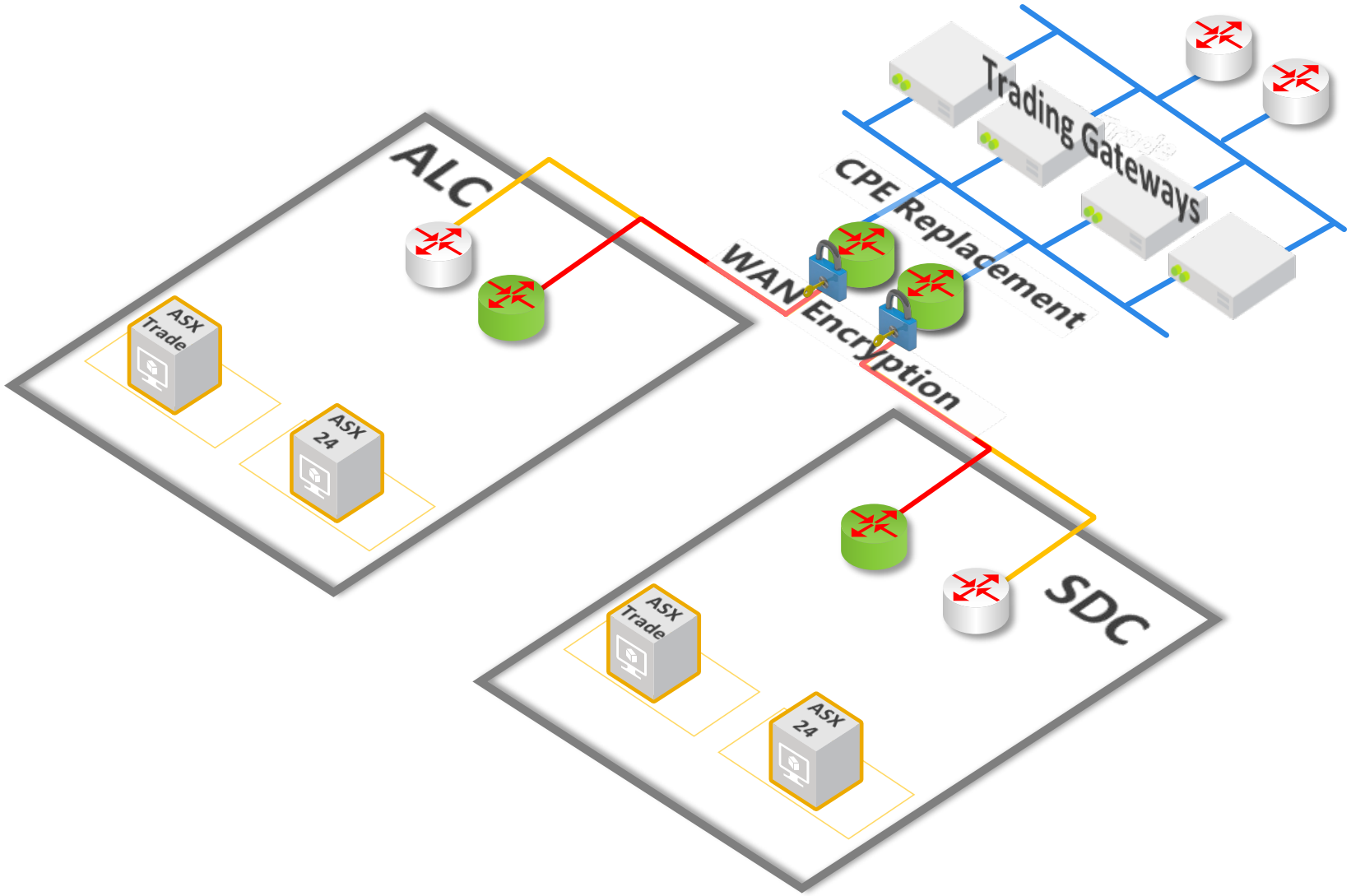

Trading Wide Area Network (WAN)

Regional ASX Net sites
Next Gen Trading Platforms Access

Trading Gateway Retirement

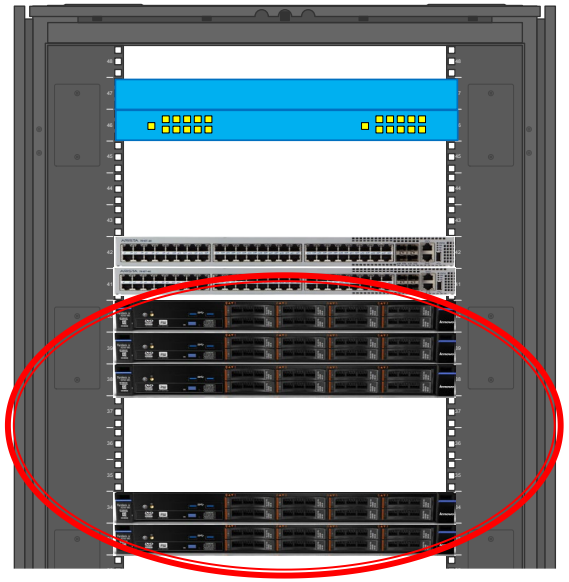

Gateway devices will be sunset
Complete retirement following
ASX Trade platform upgrade

Trading Wide Area Network (WAN)

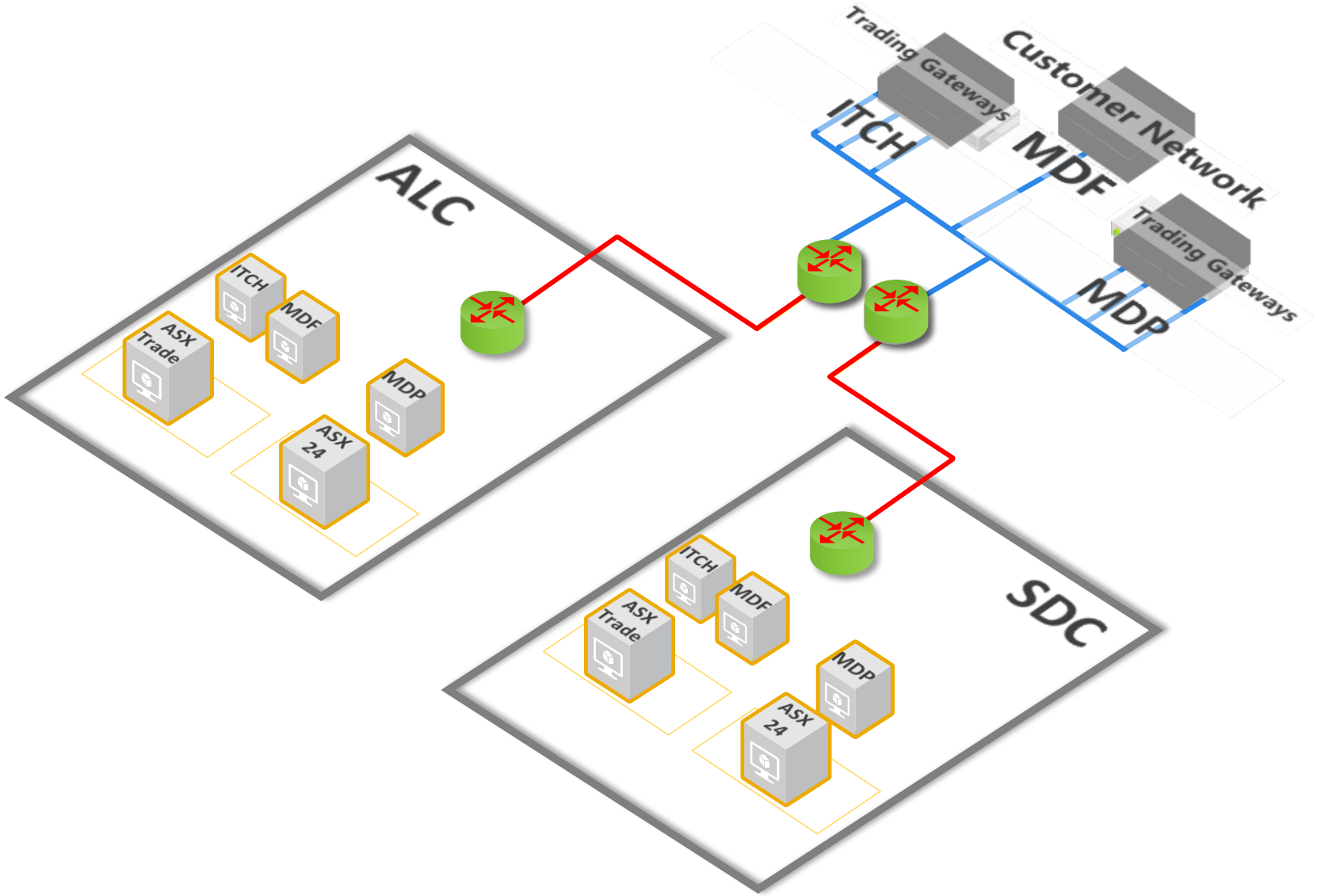

Trading Wide Area Network (WAN)

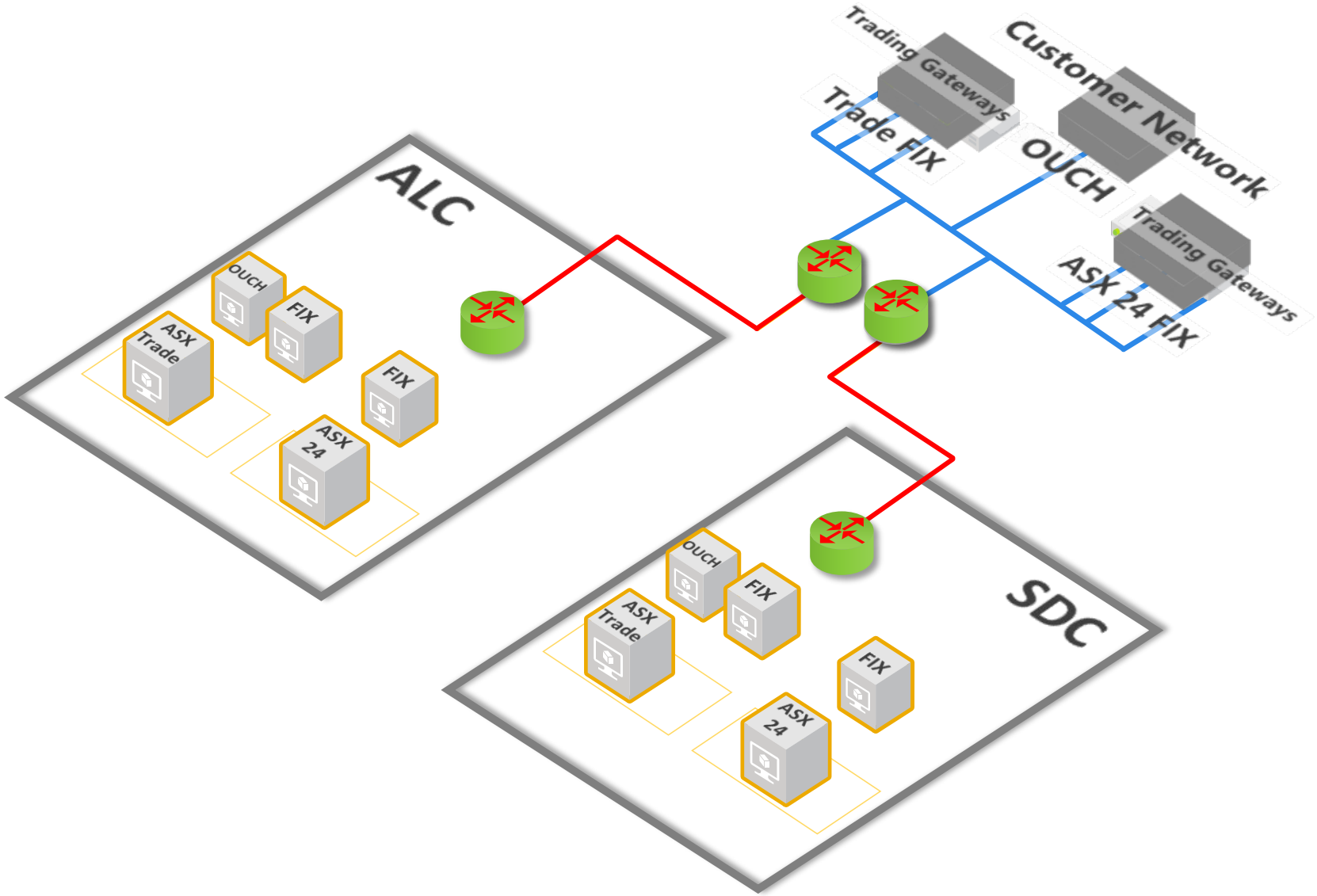

ASX

Trading Wide Area Network (WAN)

Future ASX Net Footprint

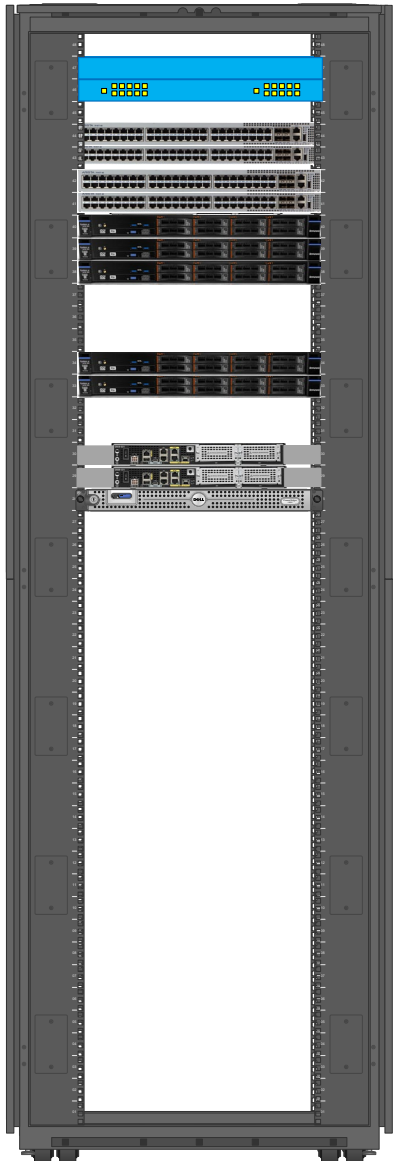

Transmission Equipment

Trading Services

Clearing, Settlement and Tech Services

ASX

Delivery Phase

ASX Net Global

Refresh International Aged Assets

Secure Carrier Backhaul

New Customer Cross Connects

Trading Wide Area Network (WAN)

ASX Net Global

Trading Wide Area Network (WAN)

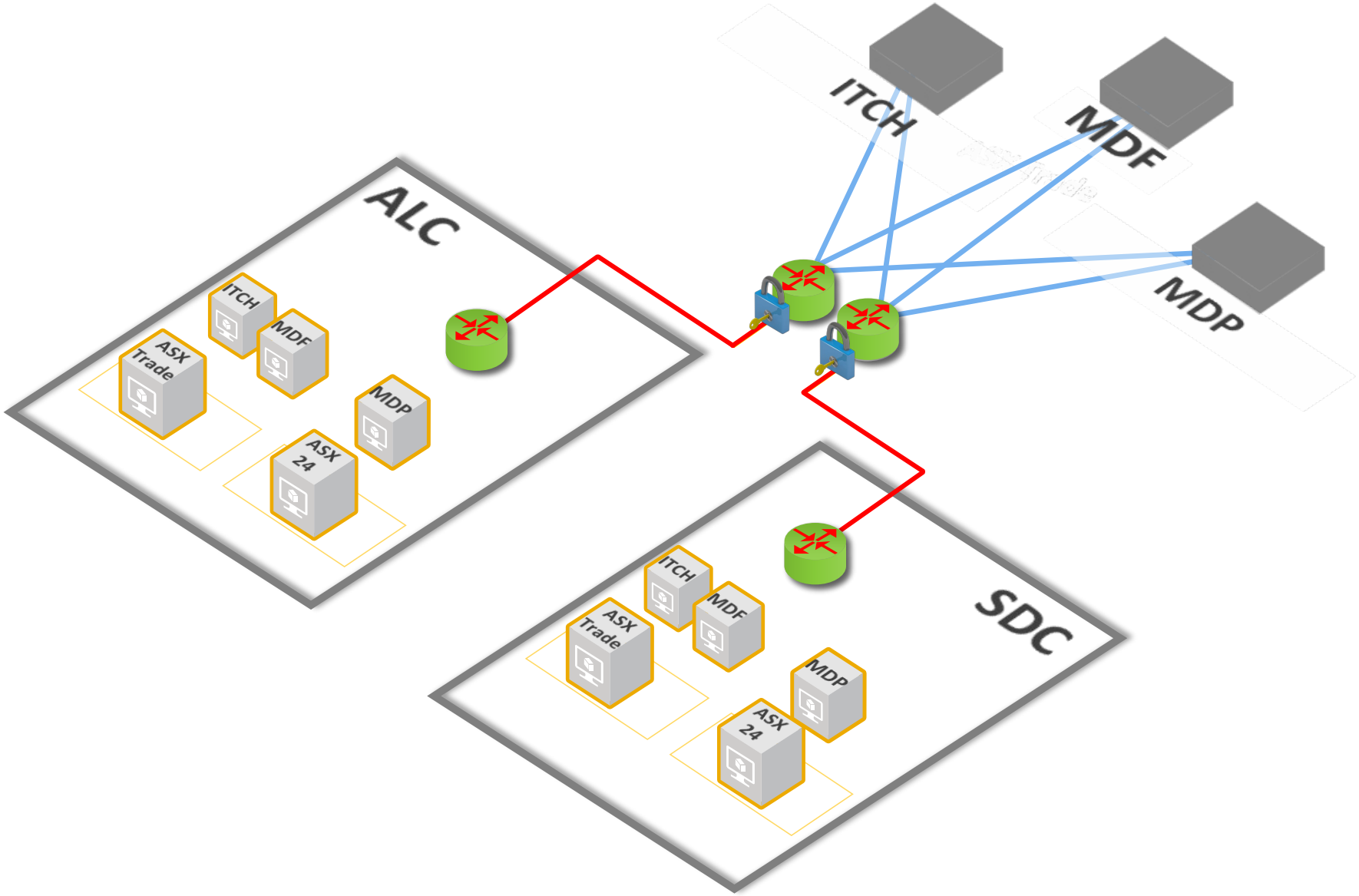

ASX

Delivery Phase

Colocation Trading Networks

- **Green Field Builds**
- **Future Market Data Access**
- **Change and Go-Live Plans**

ASX

Colocation Order Entry Access

Cabling Standards

All ASX Trade and ASX 24 colocation access products will be connected over Single Mode Fibre

Routing Protocols

All ASX Trade and ASX 24 Layer 3 colocation access products will use BGP as the standard routing protocol

Redundancy

LCC and RTC connections will be delivered as a bundled product for production ASX Trade and ASX 24 access.

Fair Market Access

All new structured cabling distances will be equal, maintaining no advantage to any rack location in the ALC

Delivery

Colocation network access will be delivered in a green field environments, coupled with the corresponding system platform refresh. This will require new cross connects to all trading services in ALC

ASX

Colocation Order Entry Access

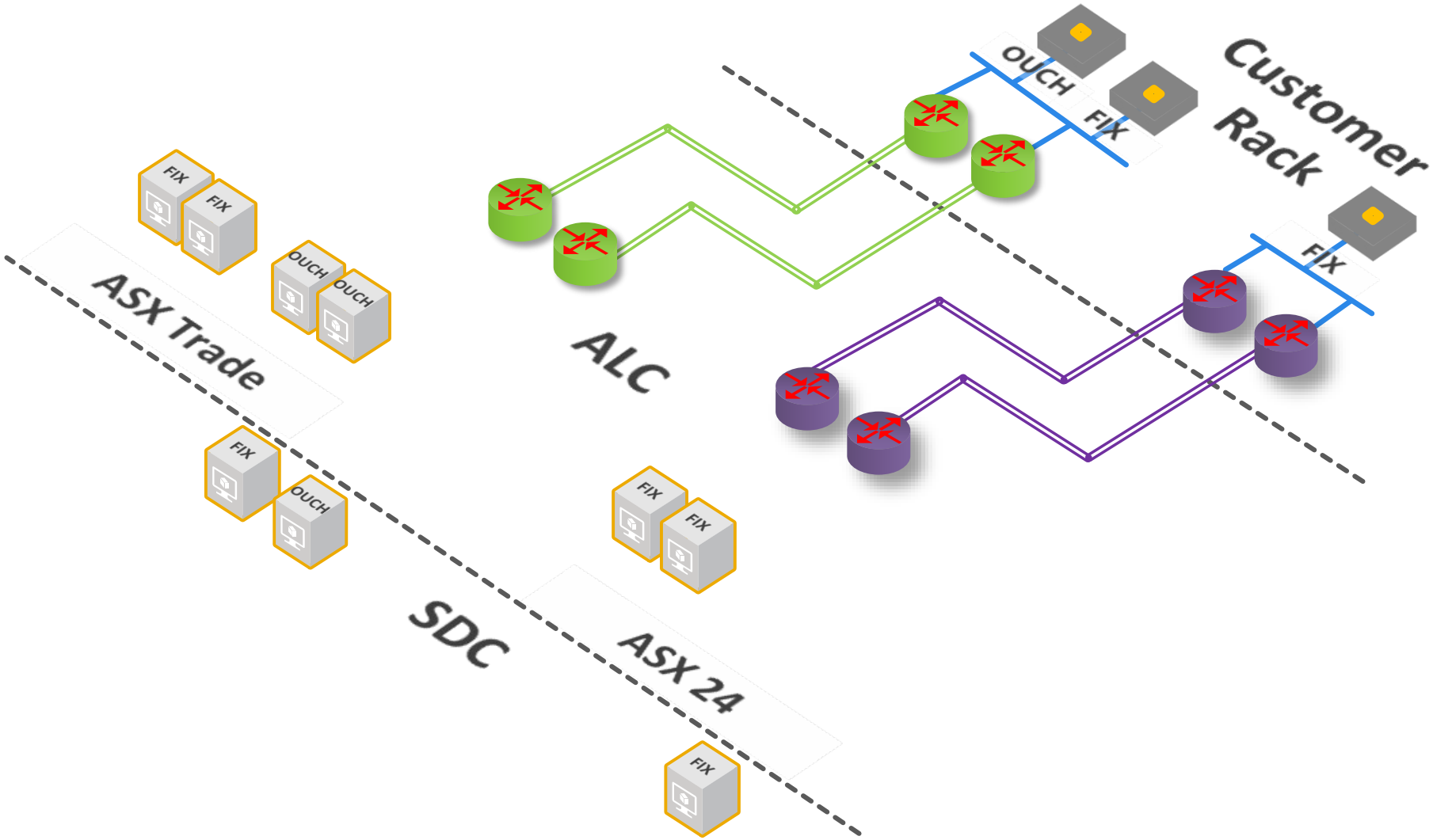

Colocation Multicast Market Data Access

Cabling Standards

All ASX Trade and ASX 24 colocation access products will be connected over Single Mode Fibre

Multicast Network Options

Multicast market data will be available via 2 options; Layer 1 or Layer 3 network delivery

Recoverability and Redundancy

Multicast feeds A and B will be delivered over independent and diverse cross connects. All unicast rewind functions will connect over a physically separate Layer 3 network

Fair Market Data Access

Multiple market data access products provide participants a choice based on their technical requirements and appetite for change

Delivery

Green fields network delivery, no additional risk to existing access during the delivery of each market platform change

ASX

Colocation Multicast Market Data

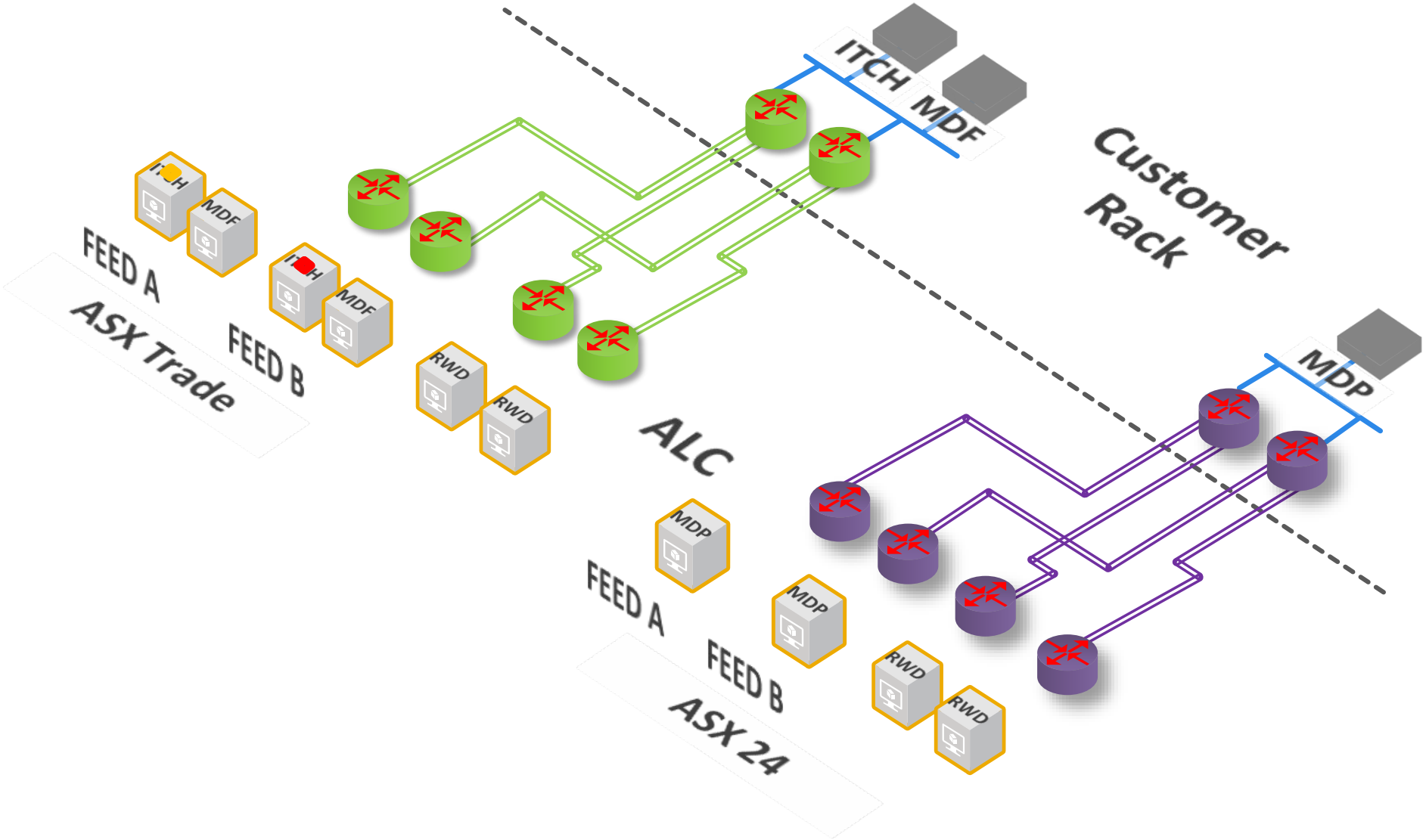

Colocation Multicast Market Data

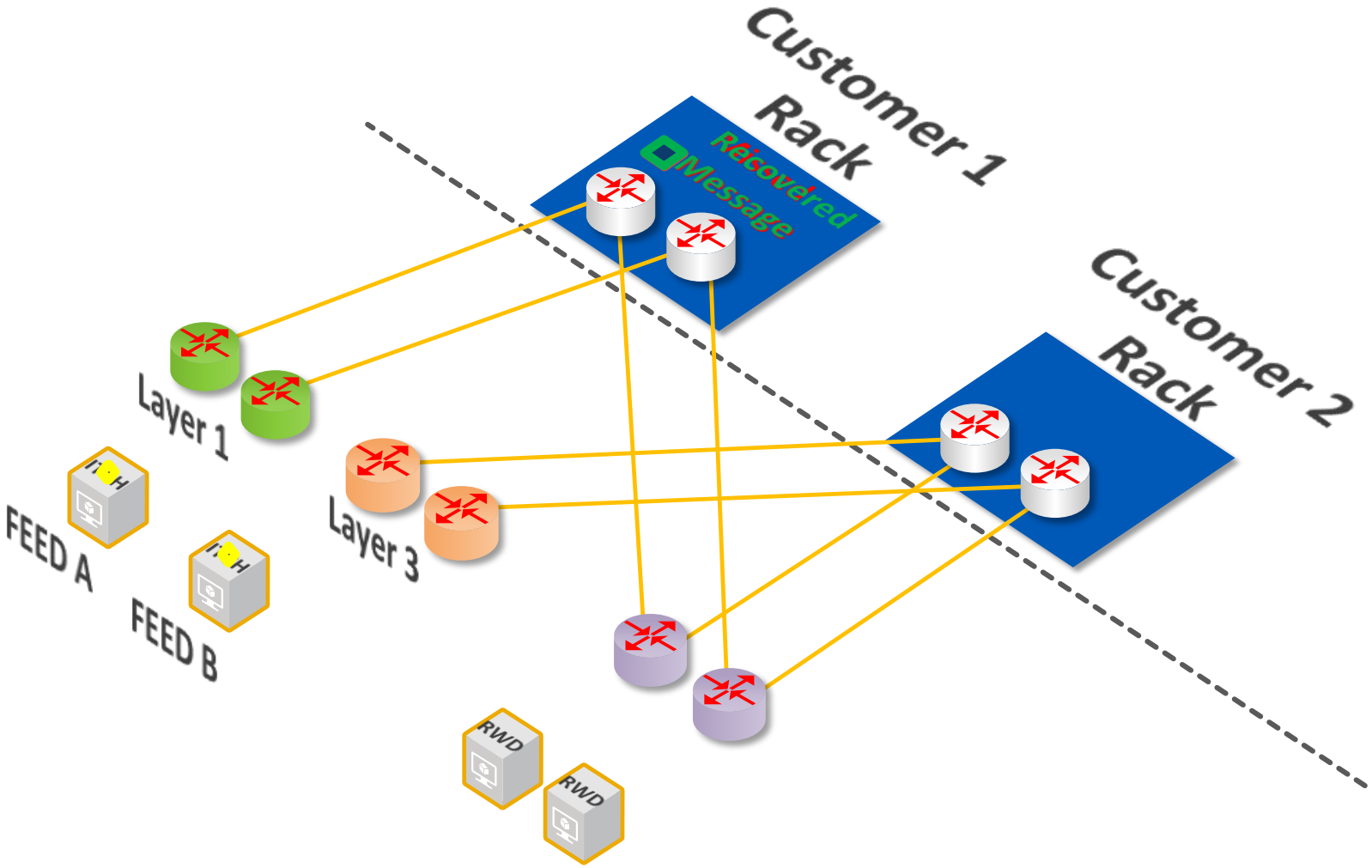

ASX

Trading Networks Timeline

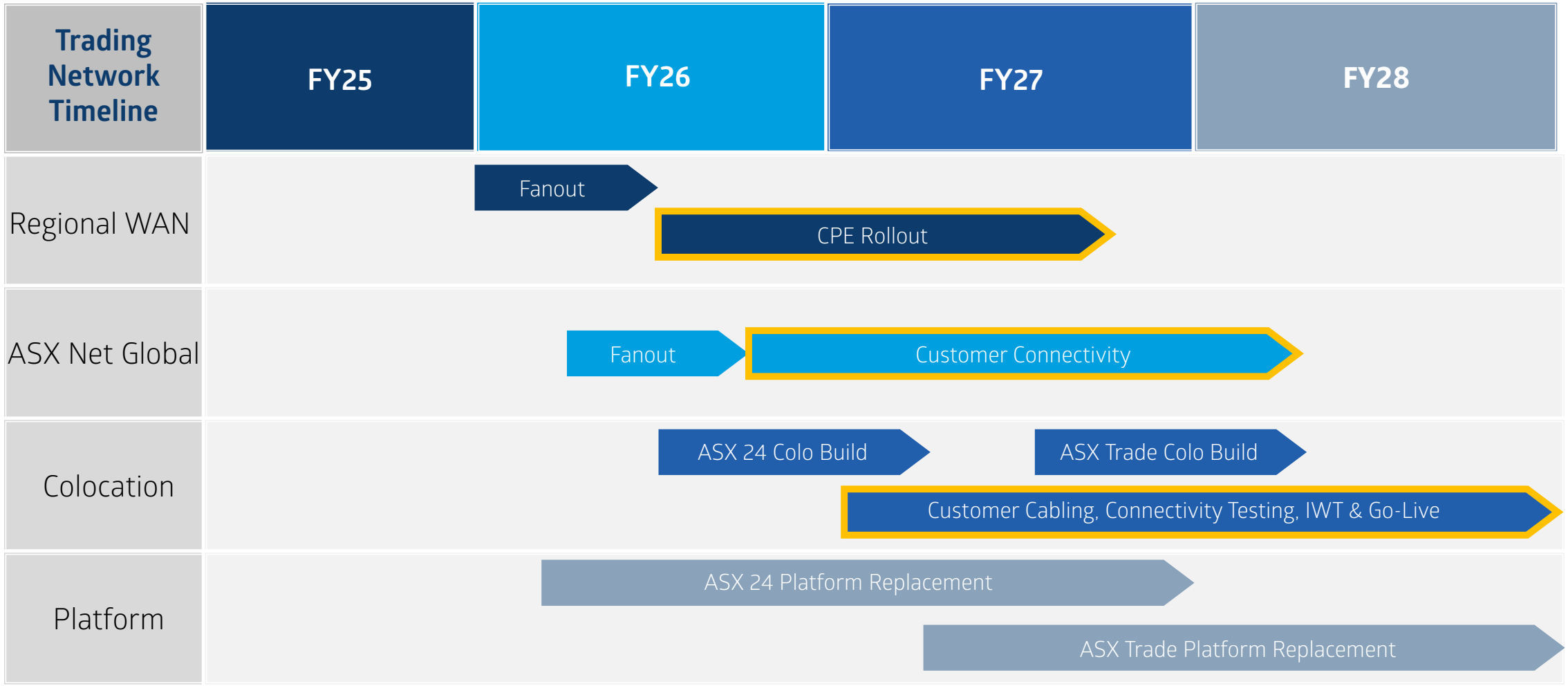

Key Contacts and Next Steps

For more information:

- Contact your BDM or Technical Account Manager
- ASX Customer Technical Support
  - 1800 663 053
  - +61 2 9227 0372
  - cts@asx.com.au

Next Steps

ASX will reach out to our customer infrastructure stakeholders from Q3-Q4 FY25 regarding the Trading WAN stream.

ASX Customer Co-ordination contacts

- Philip Brown - Philip.brown@asx.com.au
- CTS - cts@asx.com.au
- Your assigned BDM or TAM

ASX

ASX Trade
Failover and Recovery Guide

Ben Jackson
Market Operations

ASX

ASX Trade Failover and Recovery Guide

Published in June 2024

Part of ASIC REP 708

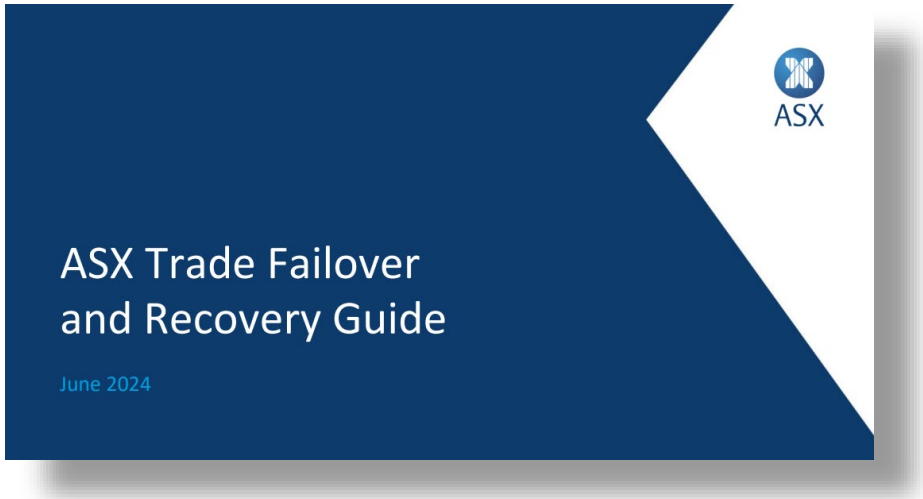

Purpose

- Provide an overview of the expected behaviour of ASX Trade on failure
- Outline ASX actions in the event of a major incident
- Market communications
- ASX Trade functionality during a disruption
- Provide details of architecture and resiliency.

ASX Trade Failover and Recovery Guide – Located on ASX.com.au

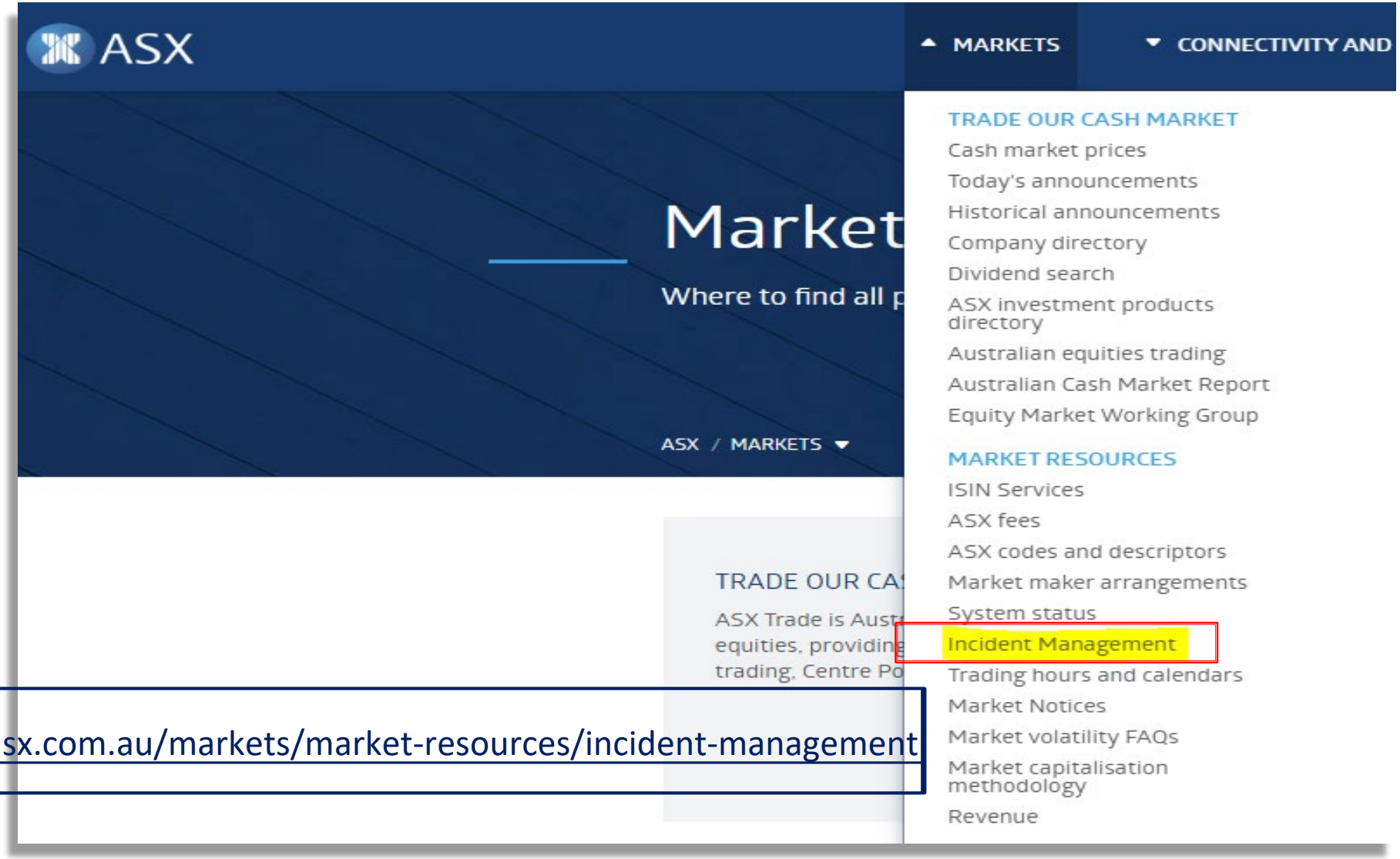

https://www.asx.com.au/markets/market-resources/incident-management

ASX

ASX Trade Failover and Recovery Guide

- Session States
- ‘Done for Day’ assessment
- Communications
- Functionality
- Architecture and Resiliency
- Gateway Failure and Recovery
- Disruption scenarios

ASX

ASX Trade Failover and Recovery Guide – Session States

ENQUIRE

Freezes market.

Allows technical teams to investigate.

Prevents further incomplete, inaccurate or duplicated data being sent out.

Prevents the situation getting worse.

ADJUST

Unfreezes market.

Allows Participants to delete and to amend their existing orders.

No executions.

ASX will move to ADJUST – if it is safe to do so.

Market can stay in Adjust for the remainder of trading day

CANCEL ONLY

Alternative to ENQUIRE

Allows Participants to cancel orders.

Used when ASX has declared it is 'Done-for-day' and will not re-open

Market data broadcasting processes are shut down – oMNet broadcast not available

ASX

ASX Trade Failover and Recovery Guide – Session States

ENQUIRE

Freezes market.

Allows technical teams to investigate.

Prevents further incomplete, inaccurate or duplicated data being sent out.

Prevents the situation getting worse.

ADJUST

Unfreezes market.

Allows Participants to delete and to amend their existing orders.

No executions.

ASX will move to ADJUST – if it is safe to do so.

Market can stay in Adjust for the remainder of trading day

CANCEL ONLY

Alternative to ENQUIRE

Allows Participants to cancel orders.

Used when ASX has declared it is 'Done-for-day' and will not re-open

Market data broadcasting processes are shut down – oMNet broadcast not available

OPEN

Re-open market if issue fixed and safe to do so.

Consider ASX licence obligation to ensure the markets are FOT.

CSPA

If ASX has declared a 'Done-for-Day' there will <u>not</u> be a CSPA.

Closing Price is last valid on-market trade or prior days closing price.

Settlement price used by ASX Clear will be the ASX market closing price - except in very exceptional circumstances

ASX Trade Failover and Recovery Guide – Done For Day

- Protocol for intraday checkpoints during a market outage
- Checkpoint every 45 minutes - from when the market is placed into ENQUIRE
- Key ASX internal stakeholders will provide input in making decision - to either:

  (a) continue to try to recover market, or

  (b) decide ASX Trade will not re-open. Close for the remainder of the day
- Cut-off time for the last decision point is 13:30
- The technical recovery path to be completed and allow market open by 14:30

ASX

ASX Trade Failover and Recovery Guide – Done For Day

10:00
Equity Market Open.

11:15
Has it been confirmed that an Intra-day recovery is **not** possible?

no = next check in 45 mins

12:10
Communication to the market that ASX Trade will remain closed for the remainder of the trading day.

10:24
ASX Trade placed into ENQUIRE session state

12:00
Has it been confirmed that an Intra-day recovery is **not** possible?

yes = Done for Day

ASX

ASX System Status Page - Communication during an Incident

ASX Trade	✓
ASX24 (NTP)	✓
CHESS	✓
Austraclear	✓
Genium Clearing	✓
OTC Clearing	✓
ASX Collateral	✓
Derivatives Clearing System (DCS)	✓
ASX Online	✓
Data Centre: Australian Liquidity Centre (ALC)	✓
Supporting Services and Platforms	✓
ASX Benchmarks	✓

- Currently – the primary source of updates for incidents
- Created based on customer feedback
- Real-time information to customers
- 12 main ASX Systems
- Refreshes every minute

https://www2.asx.com.au/markets/market-resources/system-status

ASX

ASX Trade Failover and Recovery Guide – Communications

System Status can be accessed from ASX.com.au home page

Welcome

Here are some quick links to help navigate the new ASX home.

- Trading hours and calendars
- Find a broker
- Blog
- Cash market prices
- Announcements
- Company directory
- Australian Cash Market Report
- System status
- RBA Rate Tracker
- Frequently asked questions

ASX Trade Failover and Recovery Guide – ASX System Status Page

Search ASX Online...

Search ›

Ben
ASX LIMITED

Sign-out

- My profile
- My notification preferences
- View my notifications
- Subscribe to System status change alerts

WELCOME, BEN

eferences ›

99+

My notifications

Centuria Office REIT – DvP Settlement of Accelerated Non-Re...

Treasury Bond Series for the March 2022 contract month

Cessation of an approval ASX Code: AXT CDH FEI IGE KKL SAS ...

Latitude Group Holdings Limited - DvP Settlement of Public ...

View all notifications ›

We could not retrieve your requests at this time

You may raise and view support requests by selecting an option below

View all service requests ›

Create a new service request ›

ASX Trade Failover and Recovery Guide - Functionality

Order Download Service – ODS

- **Sufficient information** - to support reconciliation and cancellation of orders.
- **Comprehensive** - set of data fields, including the private data fields.
- **Reliable** - sourced data directly from the matching engine
- Available via Secure File Transfer Protocol (SFTP)

Trade Download Service – TDS

- Provide ASX Participants with a definitive list of trades that have executed in ASX Trade
- Initial trade file will be made available once a disruption/outage occurs
- Subsequent file will be made available with any trades deemed as 'invalid' from the FOT

ASX

ASX Trade Failover and Recovery Guide - Disabling functionality

Function	Description	Intraday or Overnight	Comments	Minimum time for Disablement
Order Types and Controls	Settings controlling order behaviour such as execution, pricing, time validity and quantity disclosure	Intraday	ASX will request that Trading Participants remove any existing orders	30 minutes
Centre Point	Order types that are available for 'dark execution'	Intraday	ASX will request that Trading Participants remove any existing orders	2 hours
Tailor-Made Combinations (TMC)	Creation and entry of orders into user defined combination instruments	Intraday	ASX will request that Trading Participants remove any existing TMC orders	1 hour
Quotes	Two sided quotation messages used for market making	Intraday	Quotes and Quote Requests will be unavailable	1 hour
Trade Reporting	Facility for the reporting and publication of off market trades	Intraday	Existing trade reports for that trading day would be assessed along with any on market trades under the FOT framework	30 minutes

ASX

ASX Trade Failover and Recovery Guide - Architecture and Resiliency

- Architecture and Resiliency
  - ASX Trade OI
  - ASX Trade OUCH
  - ASX Trade ITCH

- Gateway Failure and Recovery
  - ASX Trade OI
    - Order Entry Recovery
    - Market Data Recovery
  - ASX Trade OUCH
    - Order Entry Recovery
  - ASX Trade ITCH
    - Market Data Recovery

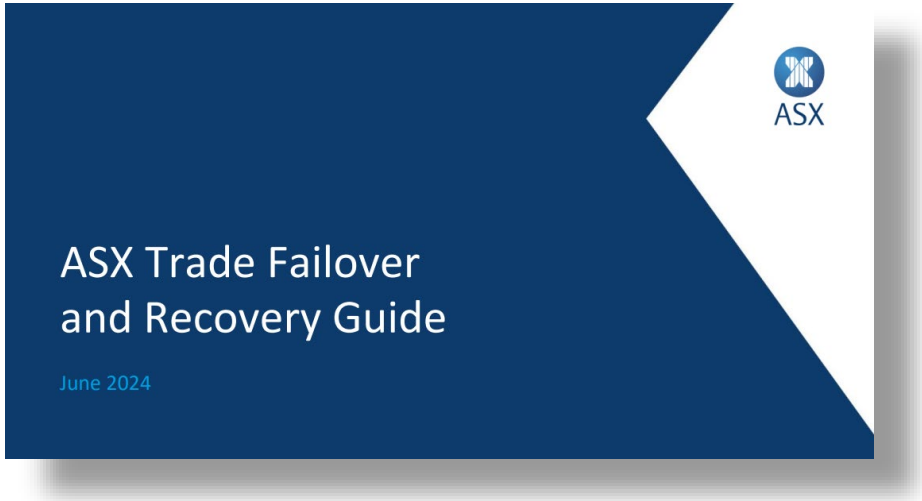

ASX Trade Failover and Recovery Guide - Disruption scenarios

Primary Matching Engine Failure

- Hot standby matching engines at primary site (ALC)
- Automatically promoted to primary status

Double Matching Engine Failure

- Warm standby matching engine at the secondary site (SDC)
- Requires manual promotion
- Market into ENQUIRE prior to standby being promoted

Partial or Full Loss of Primary Site

- Promote the SDC site to primary

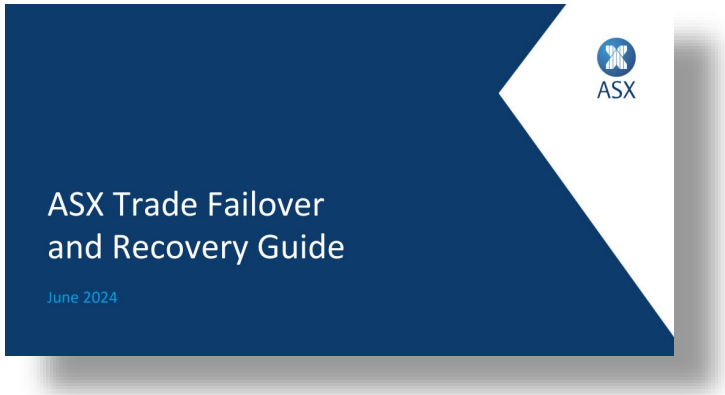

QUESTIONS

ASX

ClearStar – Program Update

Sascha Chandler, Program Director, Markets
Katie McDermott, General Manager, Derivatives Clearing Services

ASX

ClearStar Timeline

The ClearStar Program is portfolio of projects established to modernise the technology and processes underpinning ASX's OTC Derivatives and Futures Clearing services. The Program provides the governance and oversight of three core projects:

1. **OTC Clearing Platform (Calypso) upgrade.**
   OTC Clearing (Calypso) upgrade from v13 to 18. This represents a "like for like" change in terms of stakeholder interaction with services.

2. **TradeAccept Replacement**
   The off-market trade capture platform, TradeAccept, will be replaced by a modernised, participant co-designed solution.

3. **Futures Clearing – NRTC Implementation**
   Replacement of the Futures Clearing Platform (Genium v2 with Nasdaq's Real Time Clearing (NRTC))

4+. **Pricing, Collateral, ETOs**
   Replacement of other technology supporting derivatives clearing

Target Live May 2025

OTC Clearing Platform Upgrade - Calypso v18

Industry Wide Testing to commence April and complete in May 2025

TradeAccept Replacement

Co-design workshops have been conducted. Development and ASX testing throughout 2025

Industry Wide Testing window forecast for Q1 2026

Target Live Q2 2026

Target Live Q4 2026

Futures Clearing NRTC Implementation

Industry Wide Testing targeted for execution in Q2/3 2025

ASX

ClearStar Stakeholder Engagement

Broad Engagement

Quarterly ASX Clear (Futures) Working Group

Risk Consultative Committee

Additional ASX Customer Forums

ClearStar

- Business Design Working Group
- Technical Working Group
- Implementation & Transition Working Group

Industry Associations

- AFMA
- FIA

Formal Consultation

Planned Activity

- Formal consultation on ETD TradeAccept project scope and timeline in Q1 2025
- Formal consultation on ETD Futures Clearing (Genium replacement) project scope and timeline in Q2 2025
- TBC: Rules consultations

Targeted Engagement

Bi-lateral Meetings

OTC Project

- 8 Clearing Participants

ETD Project (TradeAccept & Futures Clearing)

- 16 Clearing Participants

Software Providers

Feedback Loop

Listen

Incorporate

Playback

Confirm

ClearStar Stakeholder Engagement

Themes Discussed

The list below outlines the themes that came up through our internal research and your feedback at the workshops. Many ideas were shared, and this is our playback of some of the most popular call outs throughout the sessions. We are evaluating all of these for feasibility and viability in the design of the new system.

Reporting and Information Management

- Enhanced reporting capabilities
- Historical data
- Information and reports
- Trade search
- Dashboard for single view of activities
- Timeframes and reporting hours
- Clear and visible time limits
- Upfront validation rules and trade detail validation

Self-Service and User Support

- Self Service / Help and Search
- Knowledge base
- Guides
- Support chat
- Self-service user administration
- Multi-factor authentication
- Permissions and segregation model

Trade and Process Management

- Trade lifecycle status and required actions
- Streamlined trade entry and process
- Removing manual actions
- Cloning
- Default settings
- Improved bulk uploads
- Removal of physical leg reporting
- Participant chat for issues

API Integration

- API, automation, and compatibility
- API to support all trade types
- API to access data
- Integration available to platforms

Transparency and monitoring

- Transparency
- Alerts and notifications
- Audit table of all activities

Current Engagements

Initial UX designs, API connection protocol and message type (REST vs FIX) and feedback on functional requirements.

Future Engagements

Detailed API specifications

ASX

CHESS Replacement – Update

Andrew Jones, General Manager, Securities and Payments

ASX

CHESS Replacement delivers a modern platform supporting future growth and innovation

- Release 1
- Release 2
- Future Foundations

Core Infrastructure Improvements

- ISO 20022
- FIX
- Scalability
- Supportability
- Reliability
- Security
- Maintainability
- Extensibility

Modular Architecture

- Subregister
- Settlement
- Clearing

Industry Driven Improvements

- Continuous Netting
- Account Segregation
- Matching Improvements
- Priming Improvements
- Automated Payments
- CEB simplification
- Market Claims
- ETF Improvements
- Investor Data
- Corporate Action Elections
- Data API

Platform for the Future

- T+1
- Interoperability
- Third Party Data Access
- Regular Release Model

ASX

Market volumes have become more volatile

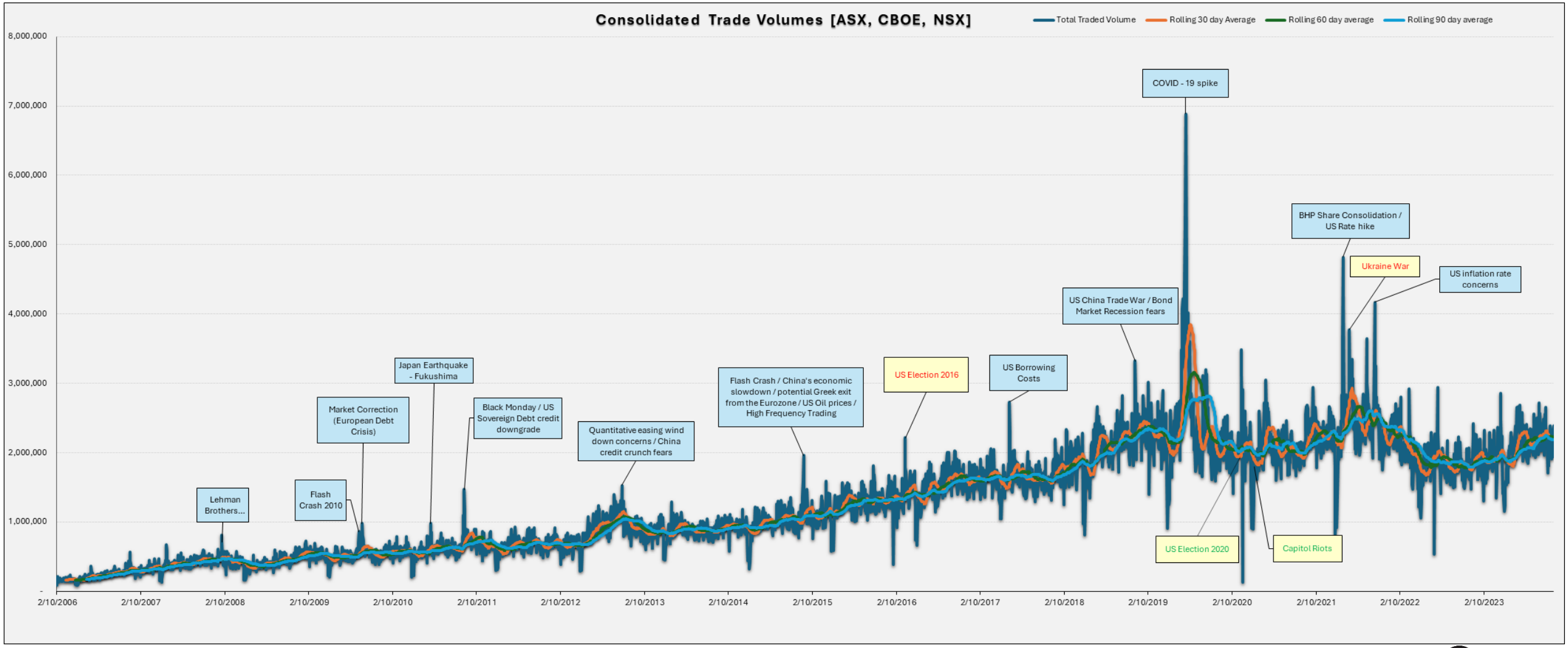

ASX

CHESS Performance

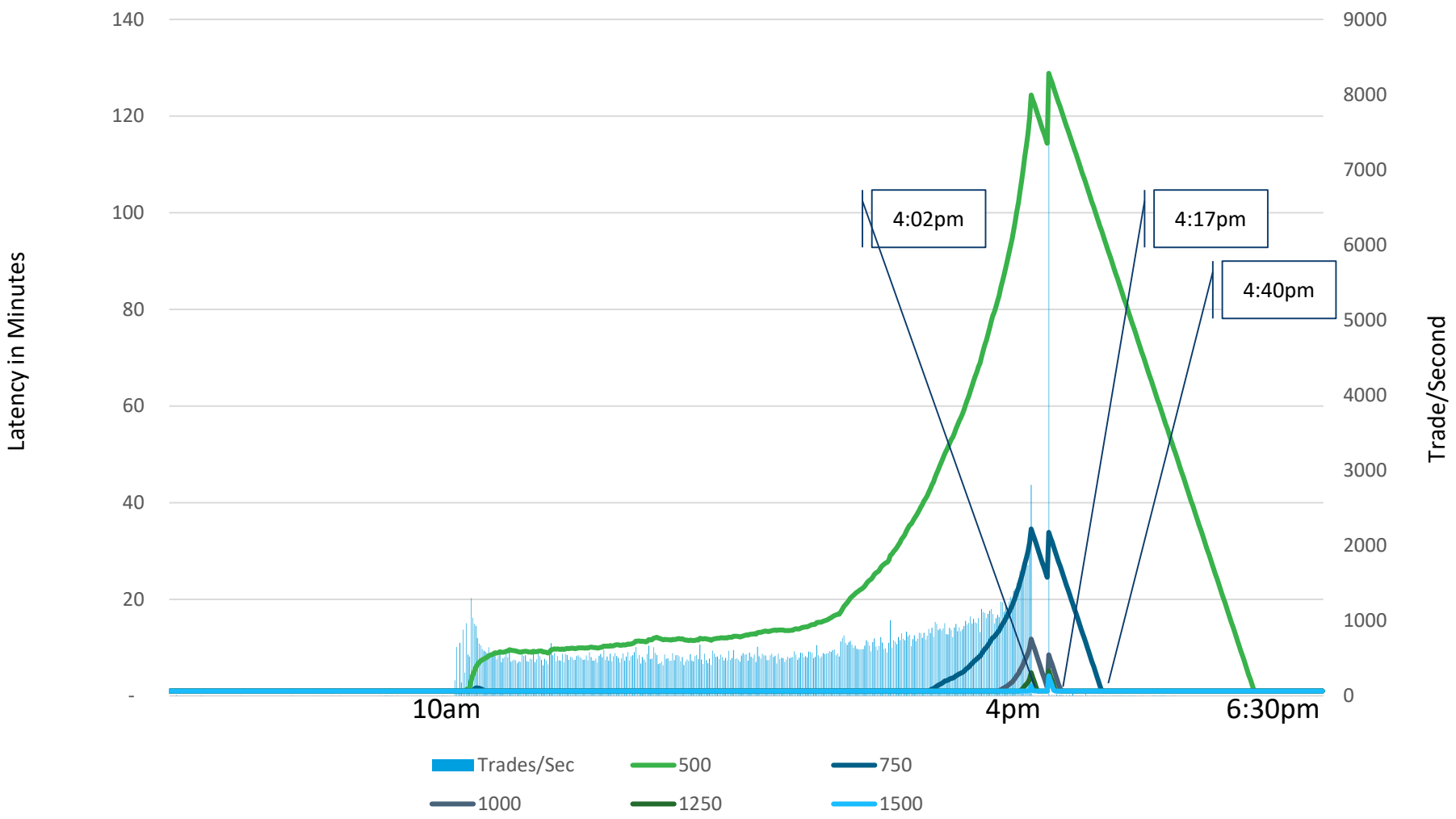

ASX

CHESS Replacement Staged Approach reducing risk and industry impact

Release 1 Clearing

- Migrate AMOs to the FIX interface
- Migrate trade registration to the new clearing component of the solution
- Implement the technical infrastructure for the strategic solution
- Provide backwards compatibility to minimise impact on the market

Release 2 Settlement & Subregister

- Implementation of the full solution including all remaining clearing functionality
- Implementation of the full settlement and sub register functionality, including enhancements added through consultation
- Take into account T+1 and other macro factors

ASX

CHESS Replacement – Major Milestones & Progress

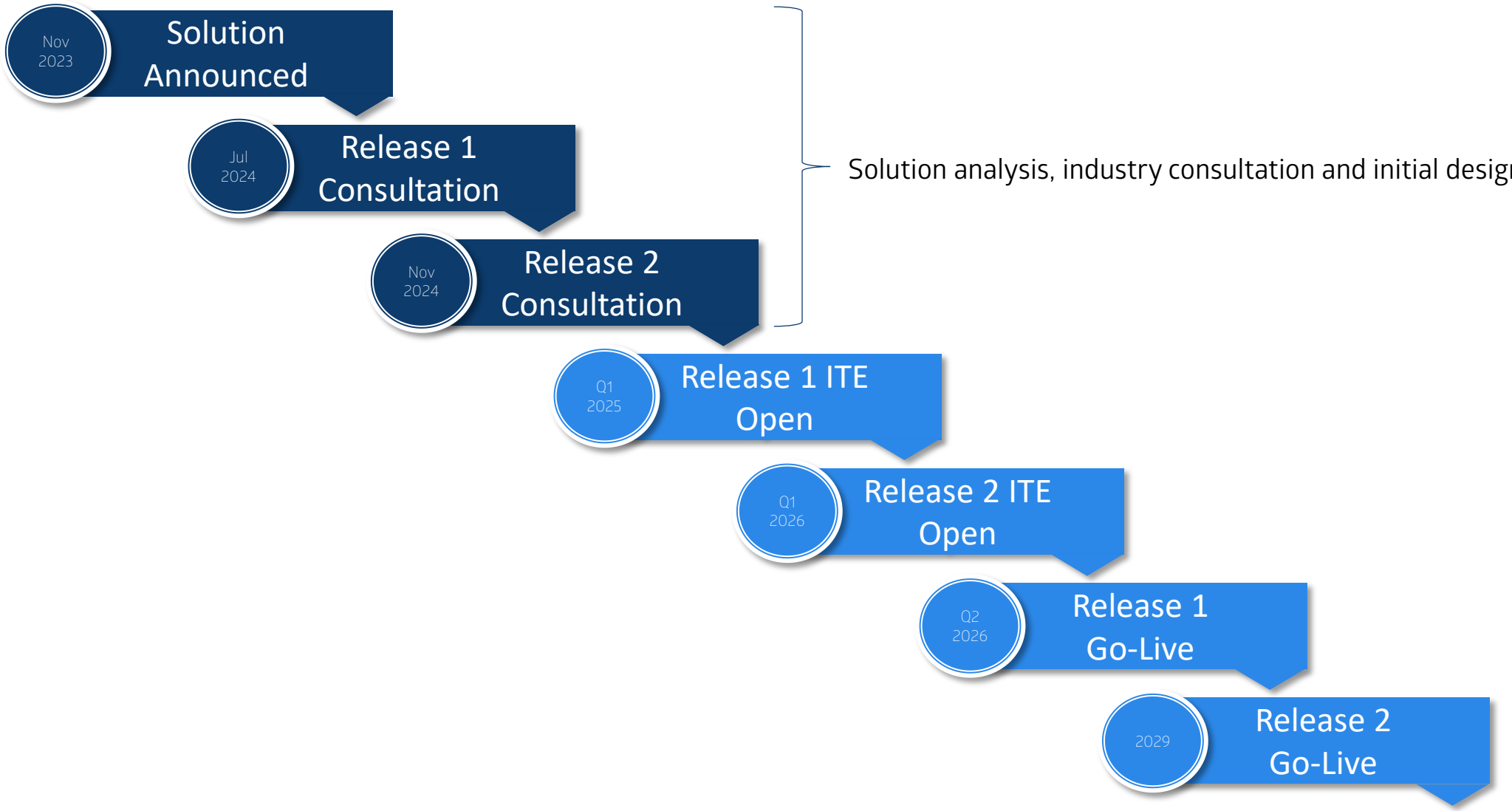

ASX

Q&A

Cardiff Smith, General Manager, Customer & Tech Operations

ASX

ASX Customer Impact Plan

Enterprise Enablement
28 November 2024
(out of cycle update)

ASX

ASX Customer Impact Plan - Legend

Customer Plan:

A plan showing only activities where the customer is required to participate or supply resourcing and/or budget, to deliver the outcome.

Trading & Derivatives

ASX 24 Bond Roll: functional changes to de-link bond futures calendar spread from the outright contracts, during the quarterly bond roll, to support different tick increments.

ASX 24 Working Group: a new working group still to be set up to engage with stakeholders concerning ASX 24 market and the ASX 24 Trade platform.

ASX CLF: the ASX Clear (Futures) Working Group provides business updates with participants on strategic plans, design, operation and development for ASXCLF including ClearStar program and underlying projects of TradeAccept and ETD Futures clearing replacement project.

Trading Platforms Network Replacement is building new network infrastructure that will provide connectivity into both ASX Trade and ASX24 platforms.

Customer Development Environment (CDE): CDE+ includes the next version of the ASX Trade software, containing bug fixes and new features to be part of the next release of ASX Trade.

Equity Market Working Group: serves as a primary forum for consistent engagement with stakeholders concerning ASX equities market and the ASX Trade platform.

Futures Co-desk Working Group: collaborative sessions aimed at understanding participants' high-level requirements and dependencies impacted by the ASX Clear (Futures) Clearing system replacement.

Interest Rate WG: ASX led industry working group to elicit stakeholder feedback focused on relevant interest rates topics and to share product updates.

Over-the-Counter (OTC): is delivering a Clearing Platform Upgrade from version 13 to version 18.

Service Release 15 (SR15): providing new features and industry standard protocols benefiting customers.

Trade Accept is an off-market registration replacement project.

CHESSR

AMO Working Group: the first stage of CHESS Replacement (Release 1) will replace CHESS's clearing component which will primarily impact Approved Market Operators (AMOs). The AMO Working Group captures feedback across key aspects of Release 1, specifically on scope & design, and readiness.

Business Design Working Group (BDWG) – its purpose is to capture inputs from industry stakeholder representatives to help define additional scope, industry acceptance criteria and business design.

CHESS Replacement Project (CHESSR): will deliver clearing services via Release 1 (R1) and settlement, sub-register and additional clearing enhancements in Release 2 (R2).

I&T Working Group: Implementation & Transition Working Group. Its purpose is to communicate and capture inputs from industry stakeholder representatives on the implementation, testing, accreditation, transition and readiness of CHESS Replacement to help shape market wide plans.

ISO Design Working Group: A key forum to communicate, understand and collaborate on the implementation of ISO 20022 in Australia's equity post trade environment.

Technical Committee: A monthly sub-committee of the ASX Business Committee for the industry to review and provide input to elements of CHESS Replacement such as project planning and design assumptions.

Proposed Customer Impact Plan

As at December 2024

	2025				2026			
	Jan – Mar 2025	Apr – Jun 2025	Jul – Sep 2025	Oct – Dec 2025	Jan – Mar 2026	Apr – Jun 2026	Jul-Sep 2026	Oct – Dec 2026
Cash and Derivatives Trading Participant	Equity Market	Equity Market	Equity Market	Equity Market	Equity Market	Equity Market		
	ASX Trade SR15 window for customer testing (inc. conformance) in CDE+							
	ASX Trade SR15 (exc. FIX OE & MDF) IWTs - 2 Apr, 3 May, 10 May							
	ASX Trade SR15 (exc. FIX OE & MDF) Go Live– 12 May		**ASX Trade SR15 - FIX OE & MDF Go Live– Q3 2025**					
	ASX Trade WAN Upgrade and Rollout Activities							
	ASX Trade (Cash)							
	ASX 24 (Derivatives)							
	ASX 24 SR4 window for customer testing in CDE+							
	ASX 24 SR4 Go Live – 8 March							
	ASX 24 WAN Upgrade and Rollout Activities							
	ASX 24	ASX 24	ASX 24	ASX 24	ASX 24	ASX 24	ASX 24	ASX 24
		Interest rate		Interest rate		Interest rate		Interest rate
	TradeAccept Usability Design feedback	TradeAccept Participant and Testing Range - tbc						
Derivatives Clearing Participant		Futures Co-design	Futures Co-design					
	OTC Participant readiness - tbc							
	OTC Participant testing - tbc							
		Go live window – OTC Clearing System Upgrade						
	ASXCLF	ASXCLF	ASXCLF	ASXCLF	ASXCLF	ASXCLF		

Trading - ASX Trade and ASX 24

Derivatives – Futures & OTC

CHESS Replacement

Working Group / co-design groups

Go live Range

Other activity

IMPORTANT: this plan is indicative as at December 2024 and is subject to change.

ASX

Proposed Customer Impact Plan

As at December 2024

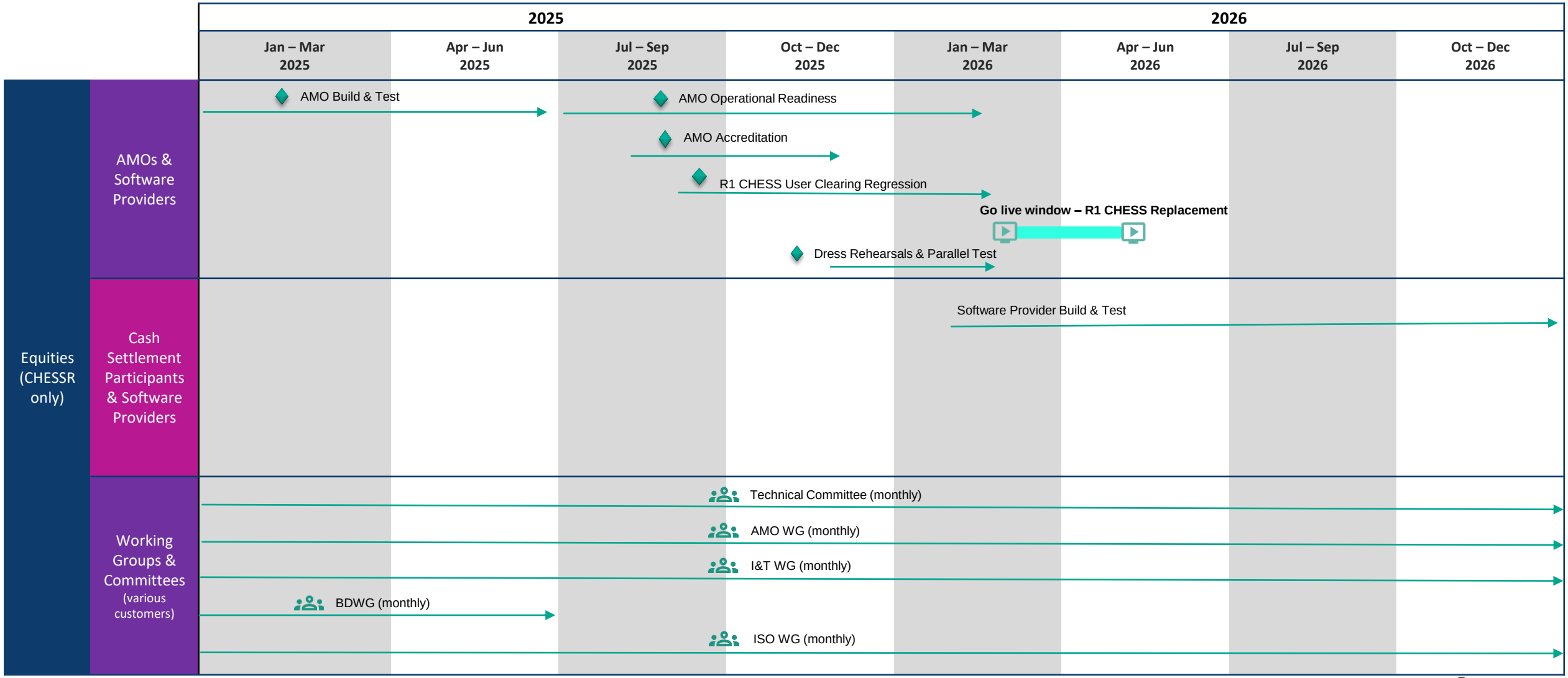

Trading - ASX Trade and ASX 24

Derivatives – Futures & OTC

CHESS Replacement

Working Group / co-design groups

Go live Range

Other activity

IMPORTANT: this plan is indicative as at December 2024 and is subject to change.

ASX

ASX

Thank you.

ASX